BZ40

BEZZERA

Dal 1901

COD. 9942015.08

REV.00

TABLE 1 Mod. PM

POS	CODE	DESCRIPTION
1	5074509LW	CUPS-HEATER GRID
2	7817801	SCREW TPS M4 X 16
3	5221846	WASHER FOR SPRING D4 H3 OT NICKEL-PLATED
4	5344501	ASSEMBLY CUPS-HEATER
5	5961552	ASSEMBLY BODY STAINLESS STEEL POLISHED
5	5961551	ASSEMBLY BODY STAINLESS STEEL SATINED
5	5961550YE	ASSEMBLY BODY WHITE
5	5961623YE	ASSEMBLY BODY WHITE
5	5961572	ASSEMBLY BODY STAINLESS STEEL SATINED
5	5961550VM	ASSEMBLY BODY BLACK
5	5961623VM	ASSEMBLY BODY BLACK
5	5961550VT	ASSEMBLY BODY RED RAL 3000
5	5961623VT	ASSEMBLY BODY RED RAL 3000
5	5961550YA	ASSEMBLY BODY RED RAL 3005
5	5961623YA	ASSEMBLY BODY RED RAL 3005
6	7816404	SCREW TE M4X10 UNI 5739 A2
7	5074329SG	WORKING FRONTAL PANEL SILKSCREENED
8	5074202LL	GROUP FRONTAL
9	5074510LW	DRIP TRAY GRID
10	5050605LL	DRIP TRAY POLISHED
11	7821401	NUT M8 UNI 5587 OT
12	5974504LL	PAINTED CHASSIS
13	7814002	NOTCHED WASHER D5 DIN 6798A A2
14	7816004	SCREW TCEI M4 X 16
15	7474201	FEET D40X50 M8X18.5 RUBBER

TABLE 1
Mod. PM

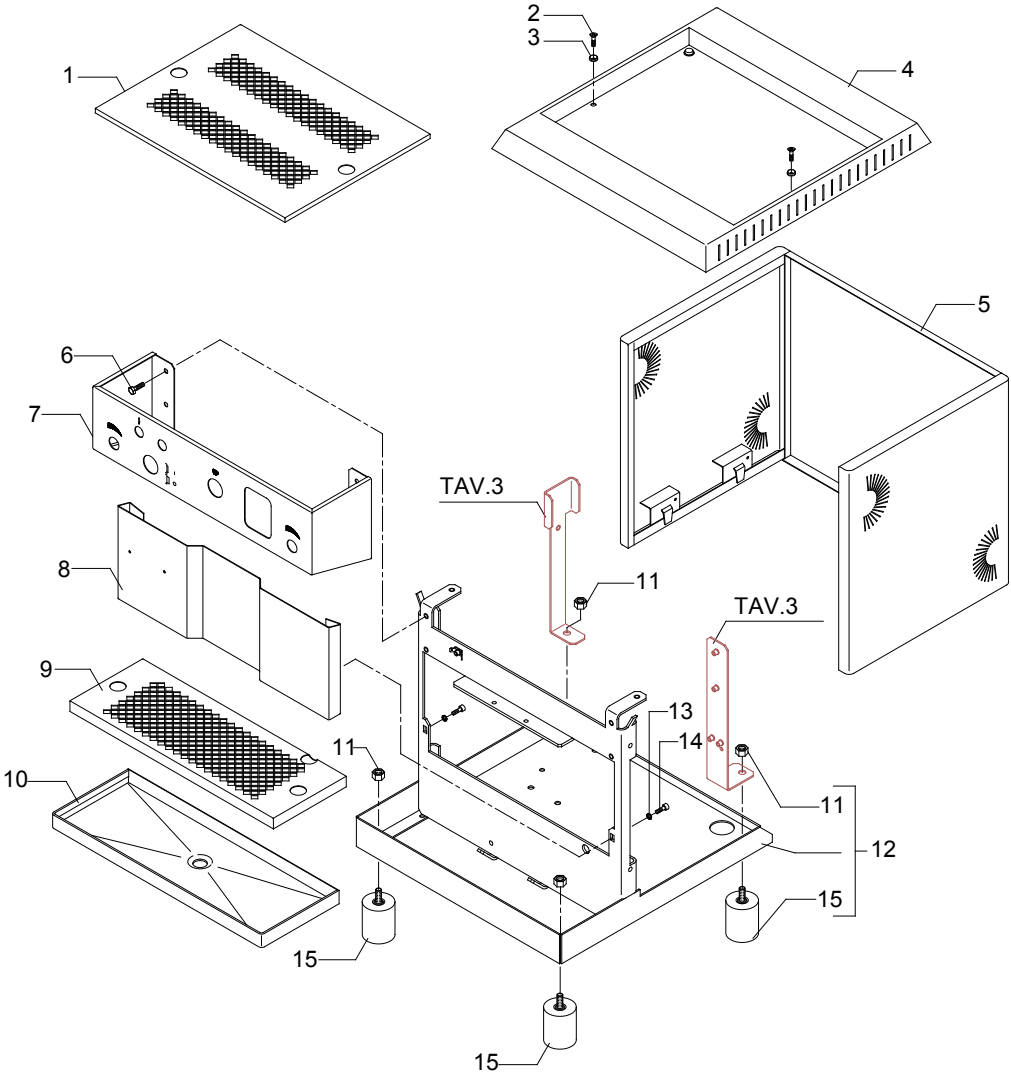

TABLE 1A Mod. DE - TE

POS	CODE	DESCRIPTION
1	5074509LW	CUPS-HEATER GRID
2	7817801	SCREW TPS M4 X 16
3	5221846	WASHER FOR SPRING D4 H3 OT NICKEL-PLATED
4	5344501	ASSEMBLY CUPS-HEATER
5	5961552	ASSEMBLY BODY STAINLESS STEEL POLISHED
5	5961551	ASSEMBLY BODY STAINLESS STEEL SATINED
5	5961550YE	ASSEMBLY BODY WHITE
5	5961623YE	ASSEMBLY BODY WHITE
5	5961572	ASSEMBLY BODY STAINLESS STEEL SATINED
5	5961550VM	ASSEMBLY BODY BLACK
5	5961623VM	ASSEMBLY BODY BLACK
5	5961550VT	ASSEMBLY BODY RED RAL 3000
5	5961623VT	ASSEMBLY BODY RED RAL 3000
5	5961550YA	ASSEMBLY BODY RED RAL 3005
5	5961623YA	ASSEMBLY BODY RED RAL 3005
6	7816404	SCREW TE M4X10 UNI 5739 A2
7	5074203SG	WORKING FRONTAL PANEL SILKSCREENED DE
7	5074392SG	WORKING FRONTAL PANEL SILKSCREENED TE
8	5074202LL	GROUP FRONTAL
9	5074510LW	DRIP TRAY GRID
10	5050605LL	DRIP TRAY POLISHED
11	7821401	NUT M8 UNI 5587 OT
12	5974504LL	PAINTED CHASSIS
13	7814002	NOTCHED WASHER D5 DIN 6798A A2
14	7816004	SCREW TCEI M4 X 16
15	7474201	FEET D40X50 M8X18.5 RUBBER
16	5660506	MEMBRANE 52 X 60 DE
16	5660510	MEMBRANE 90 X 60 TE

TABLE 1A
Mod. DE - TE

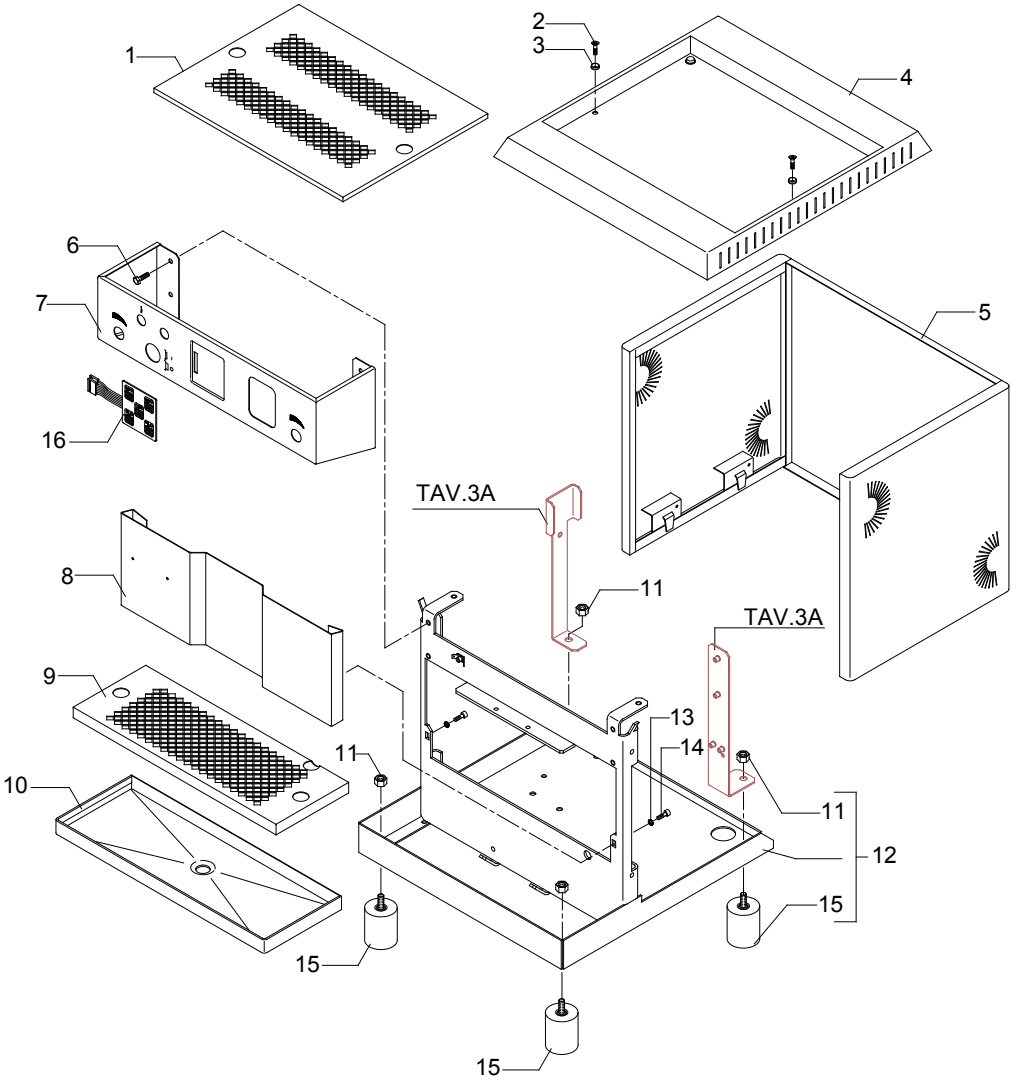

	POS	CODE	DESCRIPTION
TABLE 2	1	5265808	LEVEL PROBE D3 X 70 X 6.3
	2	5225205	STRAIGHT FITTING M10 OT
	3	5265813	LEVEL PROBE D3 X 80 X 4.8
	4	5192001	PROBE SHEATH D8 X 45 HOLE D3 PTFE
	5	5162044LL	COMPLETE HOSE FOR STEAM TAP
	6	5302005	STRAIGHT FITTING 3/8"G X M13 ES.22 H30 OT
	7	5320502.01BL	ASSEMBLY BOILER POLISHED
	8	5192306	SUCTION HOSE L=100MM PTFE
	9	5162045LL	COMPLETE HOSE FOR WATER TAP
	10	7400901	CAPILLARY 1/8" M12X1
	11	5495007	GASKET D32 X 3 BRASS
	12	5492004	GASKET D42 X 32 X 2 ASBESTOS FREE
	13	5721127	HEATING ELEMENT 1350 110V (from 19.04.07)
	13	5722240	HEATING ELEMENT 1250/1450W 220/240V
	14	5329003.01BL	ASSEMBLY EXCHANGER HOSE POLISHED
	15	5192301	SUCTION HOSE D6 L=130MM PTFE
	16	5302006TP	STRAIGHT FITTING 1/8"G X M12 OT
	17	5162046LL	COMPLETE HOSE FOR WATER BOILER LOAD
	18	5227007	DOWEL M8 X 6 HOLE M4 OT
	19	7634801	THERMIC SAFETY DEVICE 250V 125°C AUTOMATIC
	21	5058408LL	COMPLETE THERMIC SAFETY DEVICE SUPPORT
	22	7634819	THERMIC SAFETY DEVICE 250V 130°C
	23	7816017	SCREW TCEI M4X6
	24	7303001LL	UNION ELBOW 1/8"G
	25	5223013	JET M5 X 5 HOLE D1 OT
	26	7305501	PLUG M32X1

TABLE 2

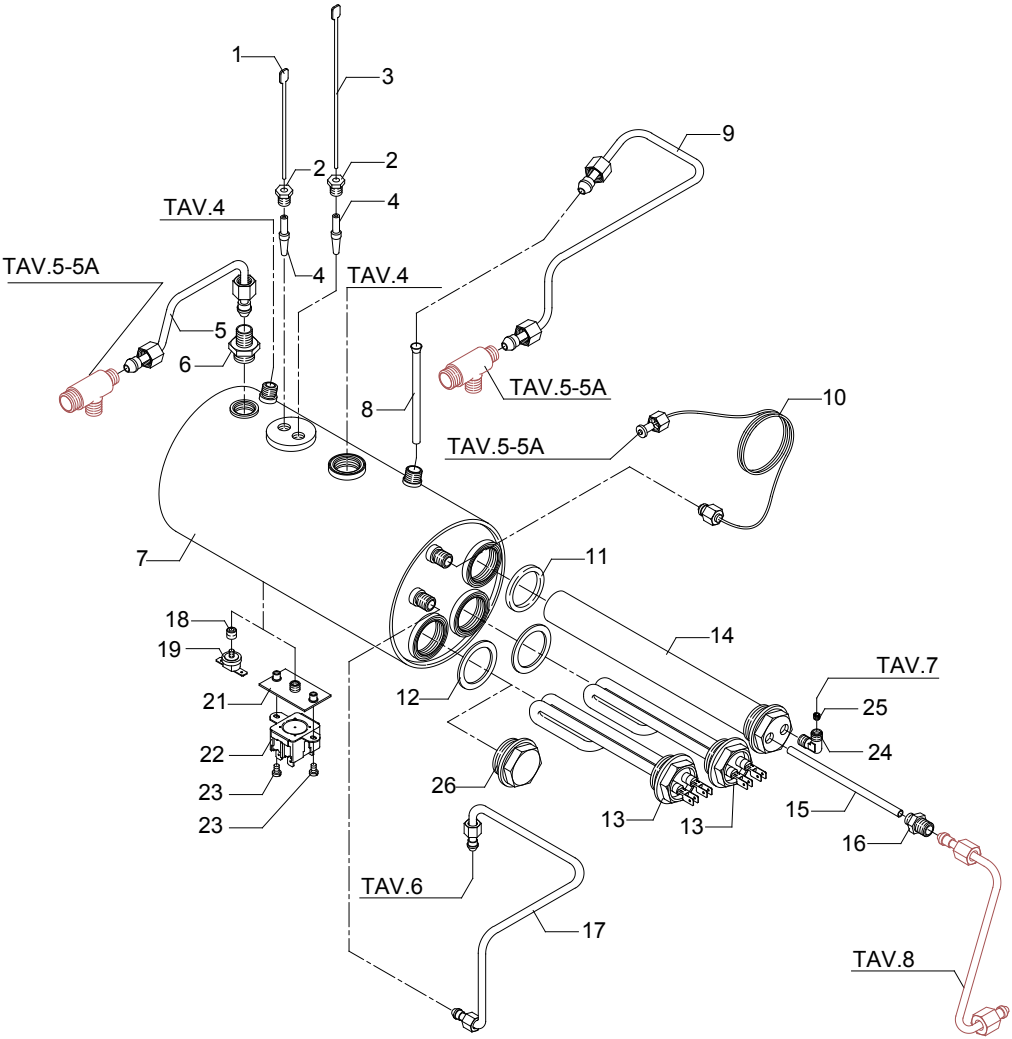
1
3
9
2
2
4
TAV.4
TAV.5-5A
4
TAV.4
5
6
TAV.5-5A
8
10
TAV.5-5A
7
11
18
19
14
TAV.7
21
12
25
22
24
23
26
13
13
15
23
16
TAV.6
17
TAV.8

	POS	CODE	DESCRIPTION
TABLE 3 Mod. PM	1	5373603	DRIP TRAY ABS
	2	7611501	CLAMP D22 FE
	3	7303501	HOSE D22 L=2MT PLASTIC
	4	5058407LL	LEVEL REGULATOR SUPPORT
	5	7661012	LEVEL REGULATOR RL 40 2S 110/120V
	5	7661003	LEVEL REGULATOR RL 30 2S 220/230V
	5	7661013	LEVEL REGULATOR RL 40 2S 240V
	6	7816004	SCREW TCEI M4 X 16
	7	7614007	CABLE-PRESS PG13,5
	7	7614001	CABLE-PRESS PG16 POLYAMIDE
	7	7614002	CABLE-PRESS PG21 POLYAMIDE
	9	5038407LL	COMPLETE RELAY SUPPORT
	10	7635403	RELAY 30A 110V
	10	7635410	RELAY 30A 220/230V
	10	7635401	RELAY 30A 240V
	11	7826201	SCREW TCEI M4X10
	12	7826211	SCREW TCI M4X30 UNI 6107 OT
	13	7612503R	CLAMP 3 CONTACTS KL24/3
	14	7614006	NUT PG13,5
	14	7614003	NUT PG16 POLYAMIDE
	14	7614004	NUT PG21 POLYAMIDE
	15	7552002	CABLE WITH AUSTRALIAN PLUG
	15	7555001	CABLE WITH SCHUKO PLUG (STANDARD 220/230V)
	15	7551001	CABLE WITH USA PLUG 125V 15A
	15	7551004	CABLE WITH USA PLUG 125V 20A
	15	7551003	CABLE WITH USA PLUG 250V 20A
	15	7554001	CABLE WITH ENGLISH PLUG (STANDARD 240V)
	15	3551501	CONNECTING CABLE 3X12 AWG L=2MT (STANDARD 110V)
	15	3550901	CONNECTING CABLE H07RN-F 3X1.5MM^2
	15	3553904.01	CONNECTING CABLE 5X2,5 MM^2 L=2,2MT(220/400V)
	16	5999903	FAIRLEAD WASHER D40 X 26 X 1 AISI 304
	17	7612512	CLAMP 3 CONTACTS
	18	5599917	CONNECTING CABLE CLAMP
	19	7612513	CLAMP 4 CONTACTS
	20	7612501R	CLAMP 5 CONTACTS KL24/5

TABLE 3
Mod. PM

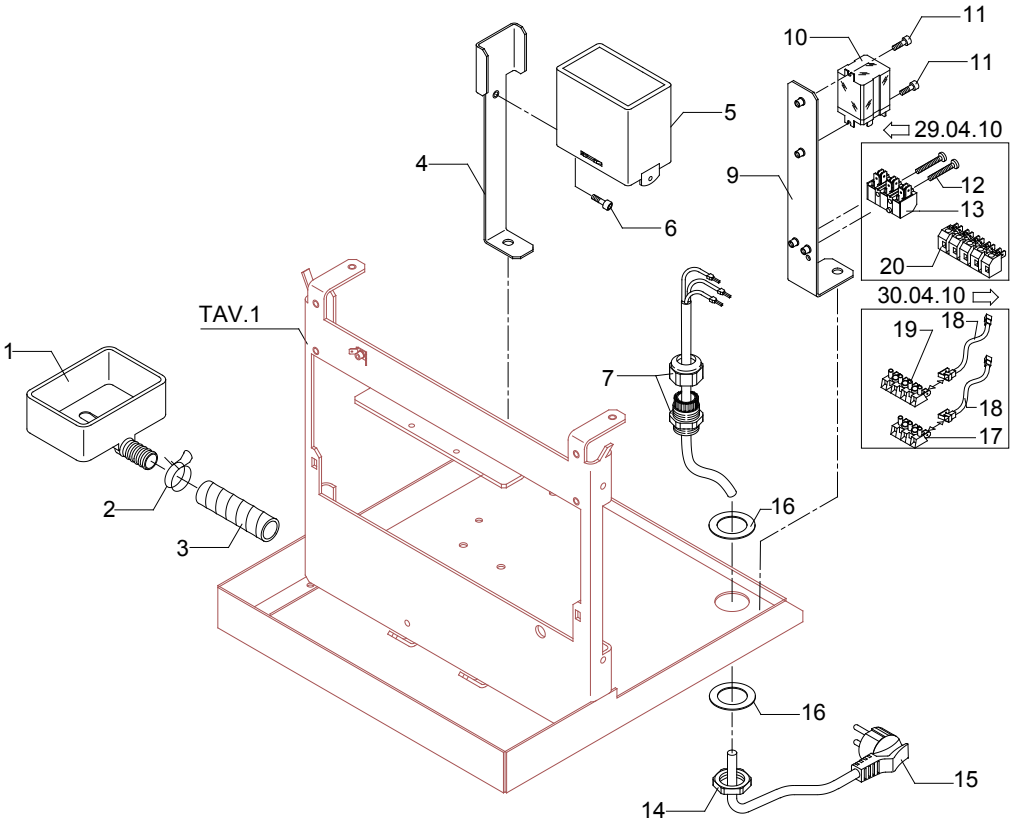

TABLE 3A Mod. DE

POS	CODE	DESCRIPTION
1	5373603	DRIP TRAY ABS
2	7611501	CLAMP D22 FE
3	7303501	HOSE D22 L=2MT PLASTIC
4	5058407LL	LEVEL REGULATOR SUPPORT
5	7662612	DOSAGE 1GR. FASTON 115V 3 PROBES
5	7662616	DOSAGE 1GR FASTON 220/230V 3 PROBES
5	7662601	DOSAGE 1GR. FASTON 240 3 PROBES
6	7816004	SCREW TCEI M4 X 16
7	7614007	CABLE-PRESS PG13,5
7	7614001	CABLE-PRESS PG16 POLYAMIDE
7	7614002	CABLE-PRESS PG21 POLYAMIDE
9	5038407LL	COMPLETE RELAY SUPPORT
10	7635403	RELAY 30A 110V
10	7635410	RELAY 30A 220/230V
10	7635401	RELAY 30A 240V
11	7816009	SCREW TCEI M4X10
12	7826211	SCREW TCI M4X30 UNI 6107 OT
13	7612503R	CLAMP 3 CONTACTS KL24/3
14	7614006	NUT PG13,5
14	7614003	NUT PG16 POLYAMIDE
14	7614004	NUT PG21 POLYAMIDE
15	7552002	CABLE WITH AUSTRALIAN PLUG
15	7555001	CABLE WITH SCHUKO PLUG (STANDARD 220/230V)
15	7551001	CABLE WITH USA PLUG 125V 15A
15	7551004	CABLE WITH USA PLUG 125V 20A
15	7551003	CABLE WITH USA PLUG 250V 20A
15	7554001	CABLE WITH ENGLISH PLUG (STANDARD 240V)
15	3550901	CONNECTING CABLE H07RN-F 3X1.5MM^2
15	3553904.01	CONNECTING CABLE 5X2,5 MM^2 L=2,2MT(220/400V)
15	3551501	CONNECTING CABLE 3X12 AWG L=2MT (STANDARD 110V)
16	5999903	FAIRLEAD WASHER D40 X 26 X 1 AISI 304
17	7636603	STRIP-LINE 7 POLES
18	7663559	CONNECTING CABLE 8 POLES L=550MM
19	7612512	CLAMP 3 CONTACTS
20	5599917	CONNECTING CABLE CLAMP
21	7612513	CLAMP 4 CONTACTS
22	7612501R	CLAMP 5 CONTACTS KL24/5

TABLE 3A
Mod. DE

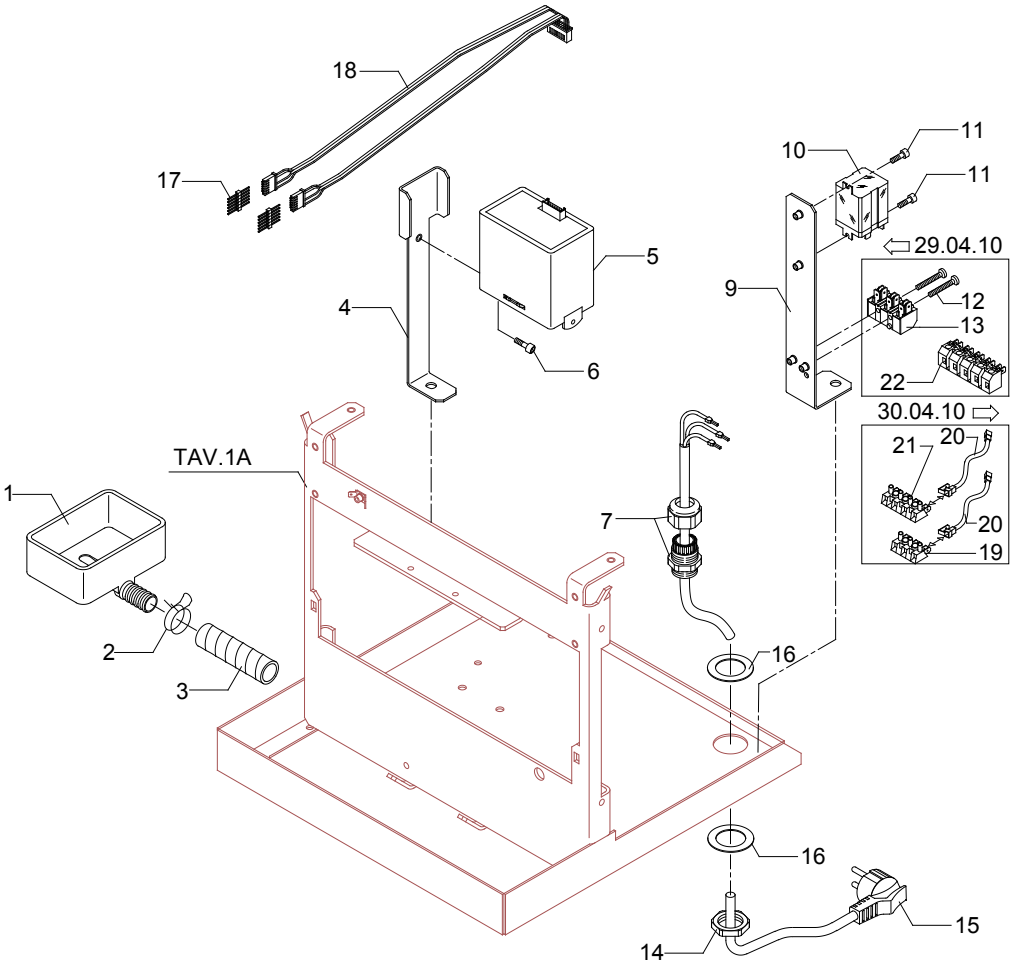

TABLE 3B Mod. TE

POS	CODE	DESCRIPTION
1	5373603	DRIP TRAY ABS
2	7611501	CLAMP D22 FE
3	7303501	HOSE D22 L=2MT PLASTIC
4	5038410LL	LEVEL REGULATOR SUPPORT
5	7662710GM	TIMED DOSAGE TE 110/120V GM
5	7662711	TIMED DOSAGE TE 220/230V
5	7662712	TIMED DOSAGE TE 240V
6	7816002	SCREW TCEI M4X12
7	7614007	CABLE-PRESS PG13,5
7	7614001	CABLE-PRESS PG16 POLYAMIDE
7	7614002	CABLE-PRESS PG21 POLYAMIDE
9	5038407LL	COMPLETE RELAY SUPPORT
10	7635403	RELAY 30A 110V
10	7635410	RELAY 30A 220/230V
10	7635401	RELAY 30A 240V
11	7816009	SCREW TCEI M4X10
12	7826211	SCREW TCI M4X30 UNI 6107 OT
13	7612503R	CLAMP 3 CONTACTS KL24/3
14	7614006	NUT PG13,5
14	7614003	NUT PG16 POLYAMIDE
14	7614004	NUT PG21 POLYAMIDE
15	7552002	CABLE WITH AUSTRALIAN PLUG
15	7555001	CABLE WITH SCHUKO PLUG (STANDARD 220/230V)
15	7551001	CABLE WITH USA PLUG 125V 15A
15	7551004	CABLE WITH USA PLUG 125V 20A
15	7551003	CABLE WITH USA PLUG 250V 20A
15	7554001	CABLE WITH ENGLISH PLUG (STANDARD 240V)
15	3551501	CONNECTING CABLE 3X12 AWG L=2MT (STANDARD 110V)
15	3550901	CONNECTING CABLE H07RN-F 3X1.5MM^2
15	3553904.01	CONNECTING CABLE 5X2,5 MM^2 L=2,2MT(220/400V)
16	5999903	FAIRLEAD WASHER D40 X 26 X 1 AISI 304
17	7636603	STRIP-LINE 7 POLES
18	7663566	CONNECTING CABLE DOSAGE
19	7612512	CLAMP 3 CONTACTS
20	5599917	CONNECTING CABLE CLAMP
21	7612513	CLAMP 4 CONTACTS
22	7612501R	CLAMP 5 CONTACTS KL24/5

TABLE 3B
Mod. TE

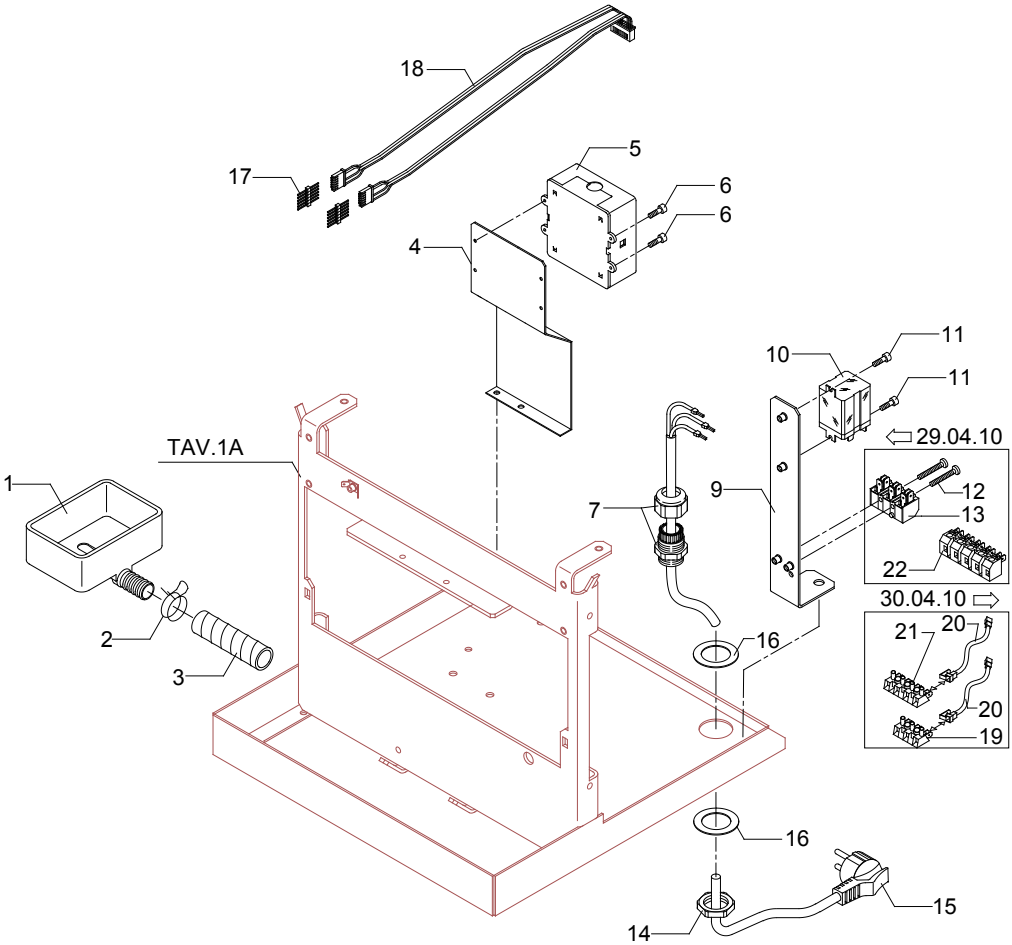

	POS	CODE	DESCRIPTION
TABLE 4	1	7304502TR	STRAIGHT FITTING 1/8"G OT
	2	7433024	PRESSOSTAT SIRAI P303T01
	3	7816416	SCREW TE M6X12 UNI 5739 A2
	4	7804002	FAN WASHER D6 DIN 6798A
	5	5226202	COUPLING RING SUPPORT H15 BRASS
	6	7816001	SCREW TCEI M5X12 UNI 5931 A2
	7	7816404	SCREW TE M4X10 UNI 5739 A2
	8	5058415LW	PRESSOSTAT SUPPORT
	9	7496004	OR GASKET 139
	10	5280505TW	COUPLING RING CHROMED WITH FLAT GASKET
	10	5280504.01CM	COUPLING RING CHROMED
	11	7493016	GASKET H 9,3 NBR 75SH
	11	7496047	OR GASKET 160 VITON 70SH
	11	7496029	OR GASKET 160 VITON 80SH
	12	5285501TP	SHOWER-HOLDER D57OT
	13	5470504	SHOWER D51.9 WITH NET AISI 304 (OLD TYPE)
	13	5470501	SHOWER D57 AISI 304
	14	7817007	SCREW TPS M5X12 DIN 963 A2 (OLD TYPE)
	14	7817001	SCREW TPS M5X16 DIN 963 A2
	15	5221821	NUT 1/4"G H5 OT
	16	5162043LL	COMPLETE HOSE FOR PRESSOSTAT
	17	5965015.01	ASSEMBLY SAFETY VALVE 1.5 BAR
	18	5963047	COMPLETE CUP
	19	7492003	GASKET D6.5

TABLE 4

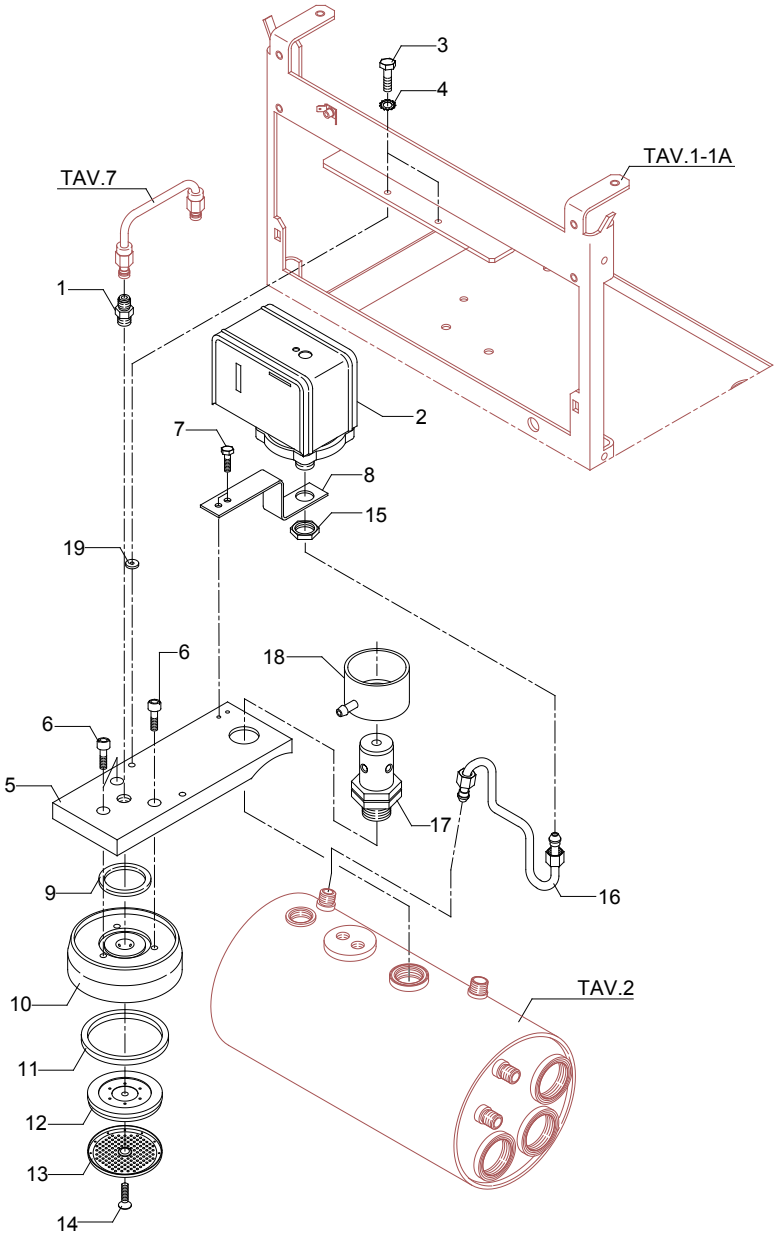

	POS	CODE	DESCRIPTION
TABLE 5 Mod. PM	1	5373903	STEAM PLUG D33
	2	7826202	SCREW TCI M5X10 UNI 6107 OT
	3	7804002	FAN WASHER D6 DIN 6798A
	4	5373904	WATER PLUG D33
	5	5221803NC	CHECK NUT 3/8"G OT NICKEL-PLATED
	6	7633303	ROUND YELLOW SWITCH
	7	7633609	ORANGE LAMP 110/240V
	8	7633610	GREEN LAMP 110/240V
	9	7633304	ROUND GREEN SWITCH
	10	5966503	ASSEMBLY COMPLETE STEAM HOSE
	11	5960502.01	ASSEMBLY ADJUSTMENT ROD
	12	7496001	OR GASKET D7.6 X 2.62 VITON
	13	5493001	GASKET D8 X 4 EPT 70SH
	14	5283001	TAP BODY 3/8"G X M13 OT
	15	5221801	NUT M13 H4 OT
	16	7496037	OR GASKET D6 X 2 VITON
	17	5163017CM	STEAM HOSE CHROMED
	18	5494001	GASKET D8.5 X 5 X 3.2 PTFE
	19	5226602	STEAM HOSE TERMINAL CHROMED
	20	5163018CM	COMPLETE WATER HOSE CHROMED
	25	5963037	PRESSURE GAUGE D70 DOUBLE SCALE
	27	7815003	PLAIN WASHER D5 UNI 6592 A2
	28	7816405	SCREW TE M4X12 UNI 5739 A2
	29	5974003.02	ASSEMBLY STEAM TAP
	30	5974004.02	ASSEMBLY WATER TAP
	31	5225226CM	STRAIGHT FITTING M22 X 1 H25 OT CHROMED
	32	5493003	GASKET D20.5X15 H1.5 NBR 70SH
	33	5226601TW	WATER HOSE TERMINAL D23.5 H16 OT CHROMED
	34	5966504	ASSEMBLY WATER HOSE
	35	5371802	KNOB D40
	36	7371001	INSULATING
	37	5283039	TAP BODY 3/8"G X 3/8"G X M13 OT
	38	5974074	ASSEMBLY STEAM TAP
	39	5974075	ASSEMBLY WATER TAP
	40	7496072	OR GASKET 121
	41	5471532	SPRING
	42	5220606TP	COMPLETE CUP
	43	7496073	OR GASKET 115
	44	5221872CM	NUT
	45	5163151CM	STEAM HOSE CHROMED
	46	5494001	GASKET D8.5 X 5 X 3.2 PTFE
	47	5226612CM	TERMINAL 3 HOLES
	48	5966537	ASSEMBLY COMPLETE STEAM HOSE 3 HOLES
	49	5225607TW	WATER HOSE CHROMED
	50	7496003	OR GASKET 108 VITON
	51	5226610TW	WATER TERMINAL HOSE

TABLE 5
Mod. PM

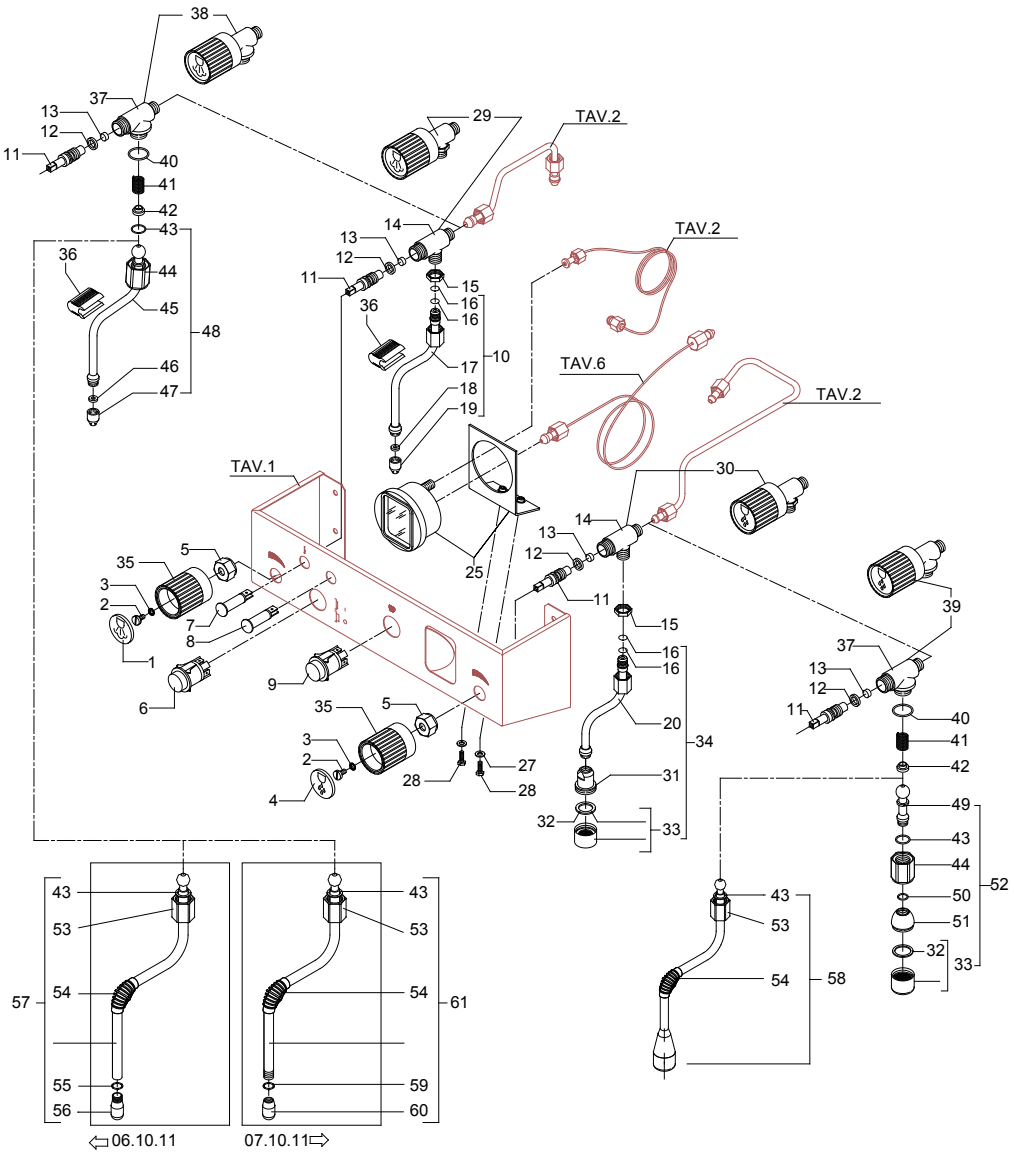

	POS	CODE	DESCRIPTION
TABLE 5 Mod. PM	52	5966531	ASSEMBLY WATER HOSE
	53	5221872TW	NUT 3/8"G
	54	7371003	INSULATING
	55	7496083	OR GASKET D4.5X1.5 NBR 70
	56	7305010	TERMINAL 4 HOLES
	57	7479958	ASSEMBLY STEAM HOSE TERMINAL 4 HOLES
	58	7479985TW	ASSEMBLY WATER HOSE
	59	7496084	GASKET
	60	7305014	TERMINAL 2 HOLES
	61	7479990TW	ASSEMBLY STEAM HOSE TERMINAL 2 HOLES

TABLE 5
Mod. PM

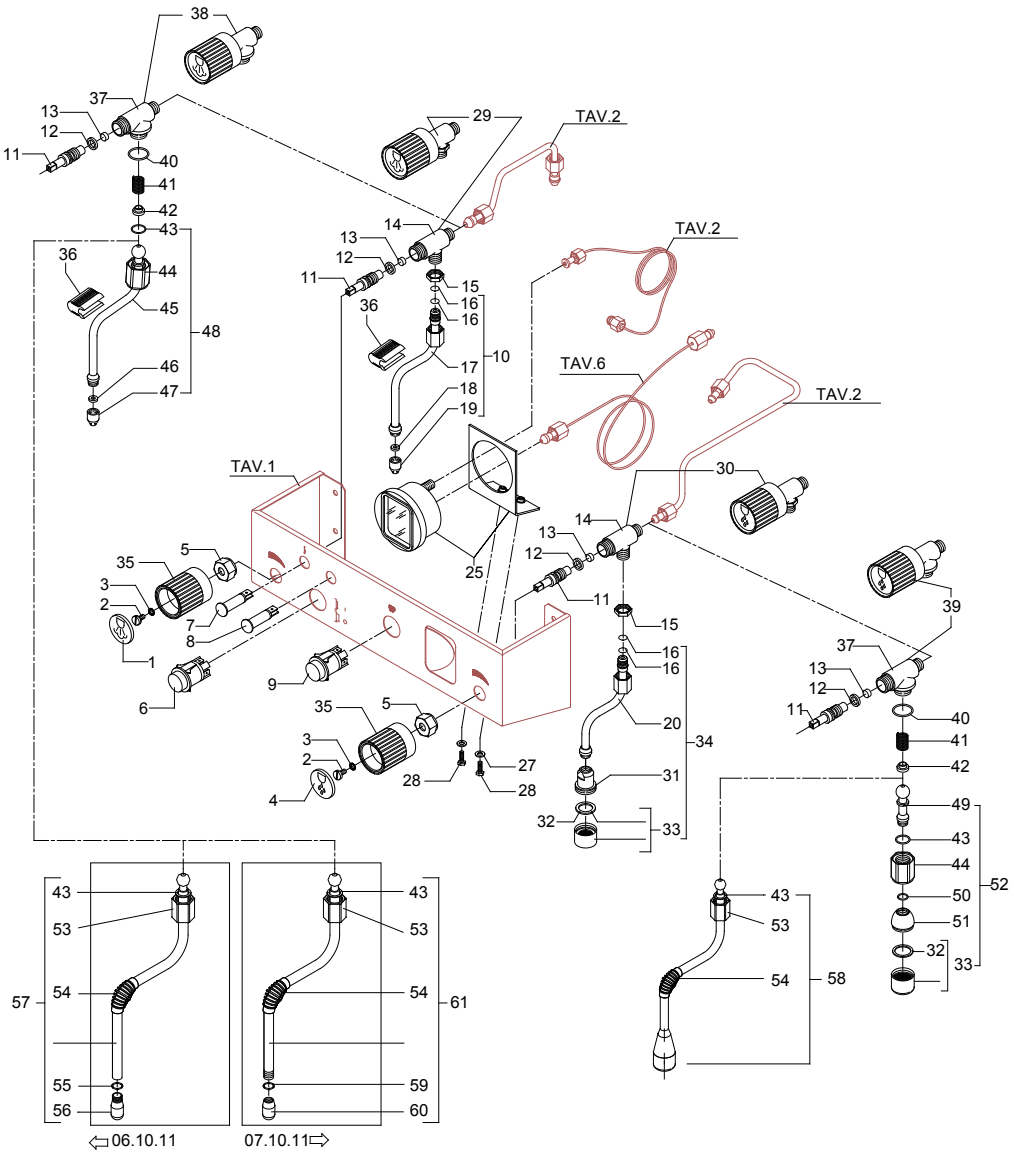

TABLE 5A Mod. DE - TE

POS	CODE	DESCRIPTION
1	5373903	STEAM PLUG D33
2	7826202	SCREW TCI M5X10 UNI 6107 OT
3	7804002	FAN WASHER D6 DIN 6798A
4	5373904	WATER PLUG D33
5	5221803NC	CHECK NUT 3/8"G OT NICKEL-PLATED
6	7633303	ROUND YELLOW SWITCH
7	7633609	ORANGE LAMP 110/240V
8	7633610	GREEN LAMP 110/240V
10	5966503	ASSEMBLY COMPLETE STEAM HOSE
11	5960502.01	ASSEMBLY ADJUSTMENT ROD
12	7496001	OR GASKET D7.6 X 2.62 VITON
13	5493001	GASKET D8 X 4 EPT 70SH
14	5283001	TAP BODY 3/8"G X M13 OT
15	5221801	NUT M13 H4 OT
16	7496037	OR GASKET D6 X 2 VITON
17	5163017CM	STEAM HOSE CHROMED
18	5494001	GASKET D8.5 X 5 X 3.2 PTFE
19	5226602	STEAM HOSE TERMINAL CHROMED
20	5163018CM	COMPLETE WATER HOSE CHROMED
25	5963037	PRESSURE GAUGE D70 DOUBLE SCALE
27	7815003	PLAIN WASHER D5 UNI 6592 A2
28	7816405	SCREW TE M4X12 UNI 5739 A2
29	5974003.02	ASSEMBLY STEAM TAP
30	5974004.02	ASSEMBLY WATER TAP
31	5225226CM	STRAIGHT FITTING M22 X 1 H25 OT CHROMED
32	5493003	GASKET D20.5X15 H1.5 NBR 70SH
33	5226601TW	WATER HOSE TERMINAL D23.5 H16 OT CHROMED
34	5966504	ASSEMBLY WATER HOSE (SPECIAL)
35	5371802	KNOB D40
36	7371001	INSULATING
37	5283039	TAP BODY 3/8"G X 3/8"G X M13 OT
38	5974074	ASSEMBLY STEAM TAP
39	5974075	ASSEMBLY WATER TAP
40	7496072	OR GASKET 121
41	5471532	SPRING
42	5220606TP	COMPLETE CUP
43	7496073	OR GASKET 115
44	5221872CM	NUT
45	5163151CM	STEAM HOSE CHROMED
46	5494001	GASKET D8.5 X 5 X 3.2 PTFE
47	5226612CM	TERMINAL 3 HOLES
48	5966537	ASSEMBLY COMPLETE STEAM HOSE 3 HOLES
49	5225607TW	WATER HOSE CHROMED
50	7496003	OR GASKET 108 VITON
51	5226610TW	WATER TERMINAL HOSE
52	5966531	ASSEMBLY WATER HOSE

TABLE 5A
Mod. DE - TE

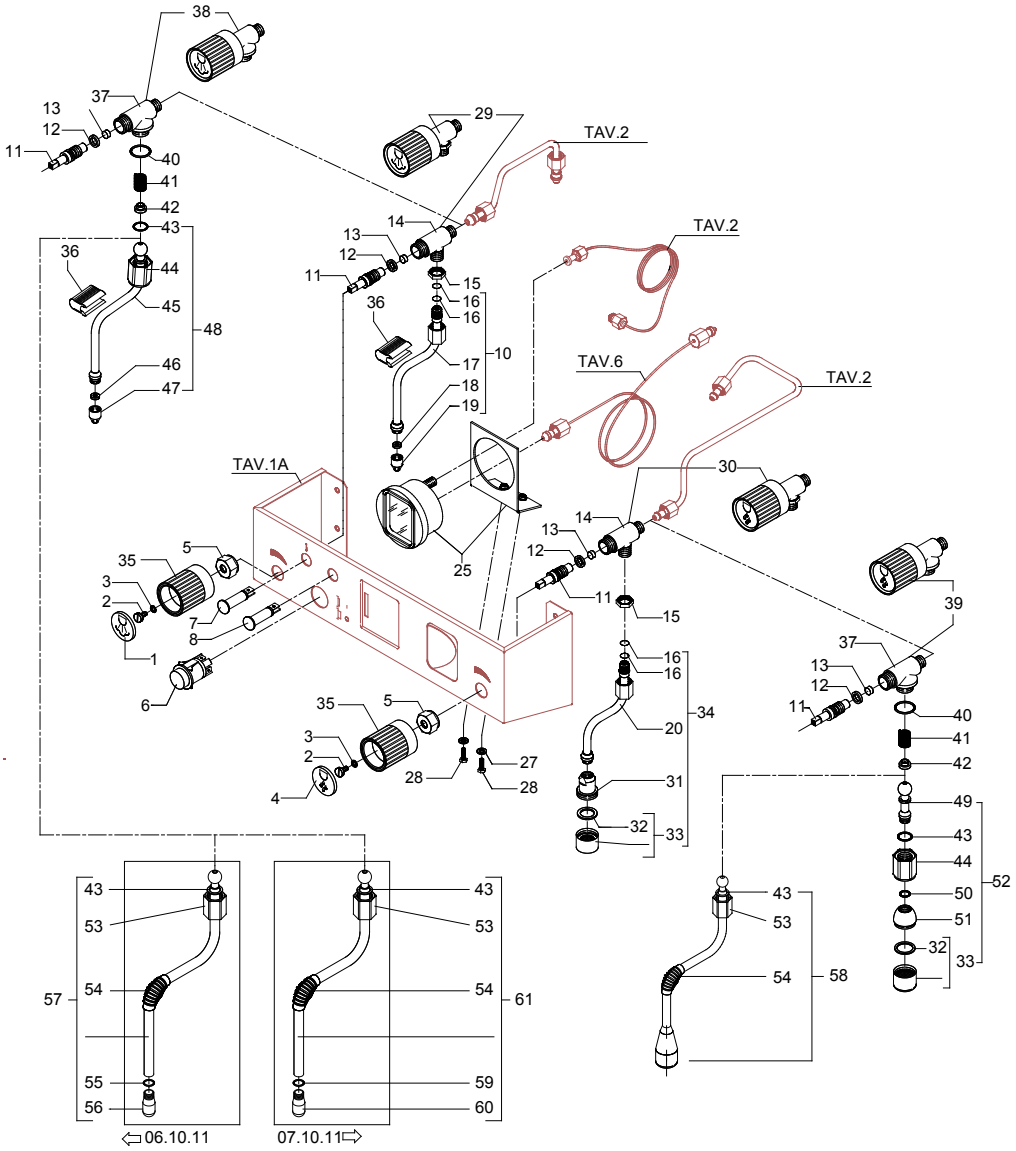

	POS	CODE	DESCRIPTION
TABLE 5A Mod. DE - TE	53	5221872TW	NUT 3/8"G
	54	7371003	INSULATING
	55	7496083	OR GASKET D4.5X1.5 NBR 70
	56	7305010	TERMINAL 4 HOLES
	57	7479958	ASSEMBLY STEAM HOSE TERMINAL 4 HOLES
	58	7479985TW	ASSEMBLY WATER HOSE
	59	7496084	GASKET
	60	7305014	TERMINAL 2 HOLES
	61	7479990TW	ASSEMBLY STEAM HOSE TERMINAL 2 HOLES

TABLE 5A
Mod. DE - TE

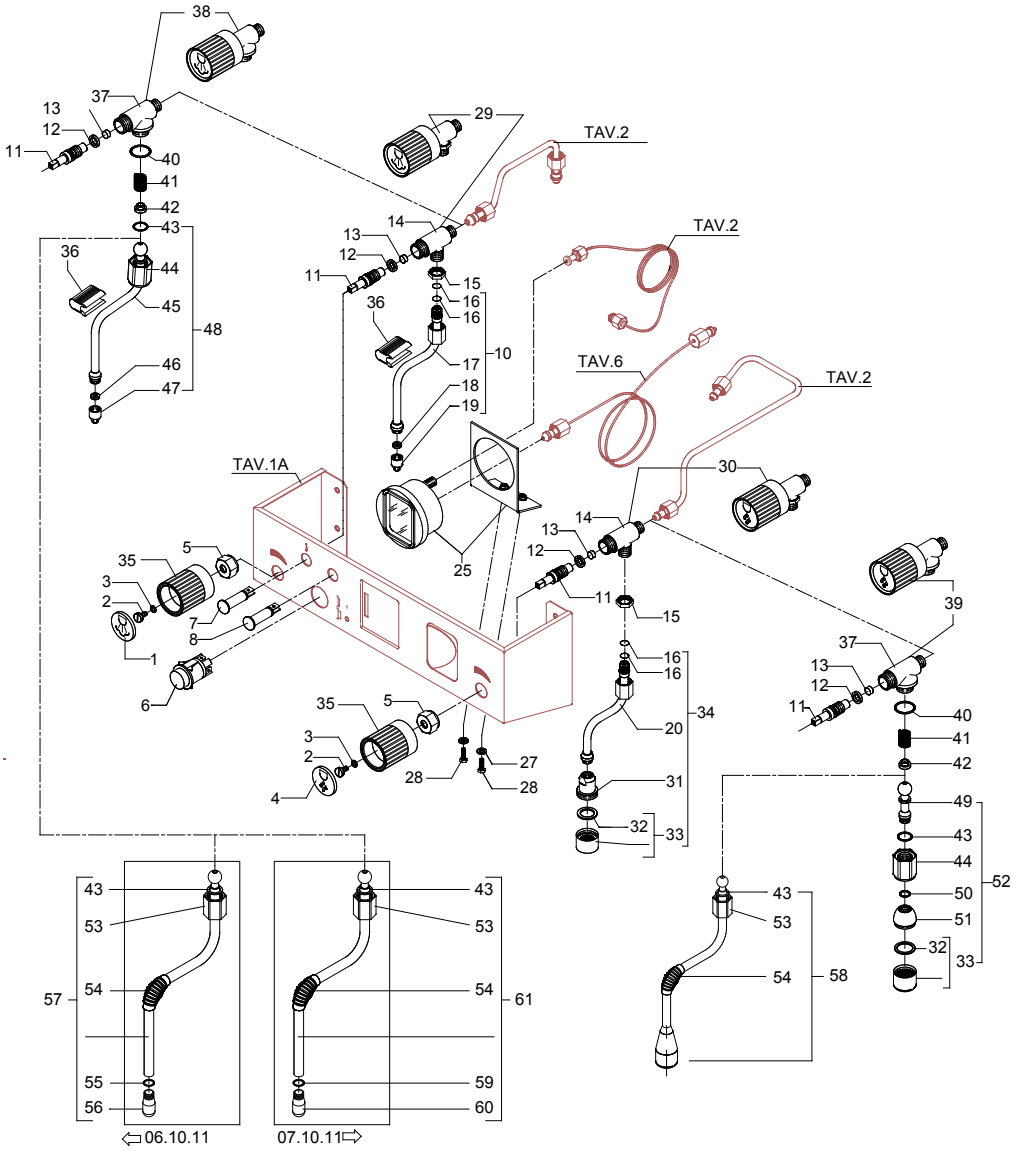

	POS	CODE	DESCRIPTION
TABLE 6	1	5223003	JET M6 X 6 HOLE D0.8 OT
	2	5225233	FITTING M12 ES.14 H22 HOLE M6 OT
	3	5302015	STRAIGHT FITTING 1/8”G OT
	4	5224002	STUD D8.5 X 17.5 OT
	5	7496035	OR GASKET D4.2 X 1.9 VITON
	6	7304502LL	STRAIGHT FITTING 1/8”G WITH COUNTERSINK
	7	7304507TR	UNION ELBOW 1/8”G MF OT
	8	5221844	NUT 1/8”G H3
	10	7400901	CAPILLARY 1/8” M12X1
	11	7701111	SOLENOID VALVE 2 WAY 115V PARKER
	11	7702310	SOLENOID VALVE 2 WAY 230V PARKER
	11	7702409	SOLENOID VALVE 2 WAY 240V PARKER
	12	7630327	SOLENOID VALVE COIL 110V PARKER
	12	7630328	SOLENOID VALVE COIL 220/230V PARKER
	12	7630329	SOLENOID VALVE COIL 240V PARKER
	13	5965020	ASSEMBLY COMPLETE CHECK VALVE
	14	5973055	ASSEMBLY BANJO UNION
	15	5302032	STRAIGHT FITTING 1/8”G X 3/8”NPT ES.22 H27 OT
	17	7611508	PUMP CLAMP
	18	7730508	PUMP JOINT KIT (NEW)
	19	7374005	PROCON PUMP FILTER
	20	7496048	OR GASKET FOR PUMP FILTER PROCON
	21	7730506	PUMP 100 L/H PA104X 1-2GR
	22	7741001	ELECTRIC MOTOR 100V
	22	7741102	ELECTRIC MOTOR 110V 18MF
	22	7742206	ELECTRIC MOTOR 220/240V 10MF
	23	7821403	NUT M6 UNI 5587 OT
	24	7805004	PLAIN WASHER D6 UNI 6592 FEZN
	25	5194506LL	INLET WATER HOSE PTFE
	27	7304502TR	STRAIGHT FITTING 1/8”G OT
	28	5302057	FITTING 1/8” X 3/8”G OT
	30	7816417	SCREW TE M6X16 UNI 5739 A2
	31	7200504	FLEXIBLE HOSE 3/8” L=1500 AISI 304

TABLE 6

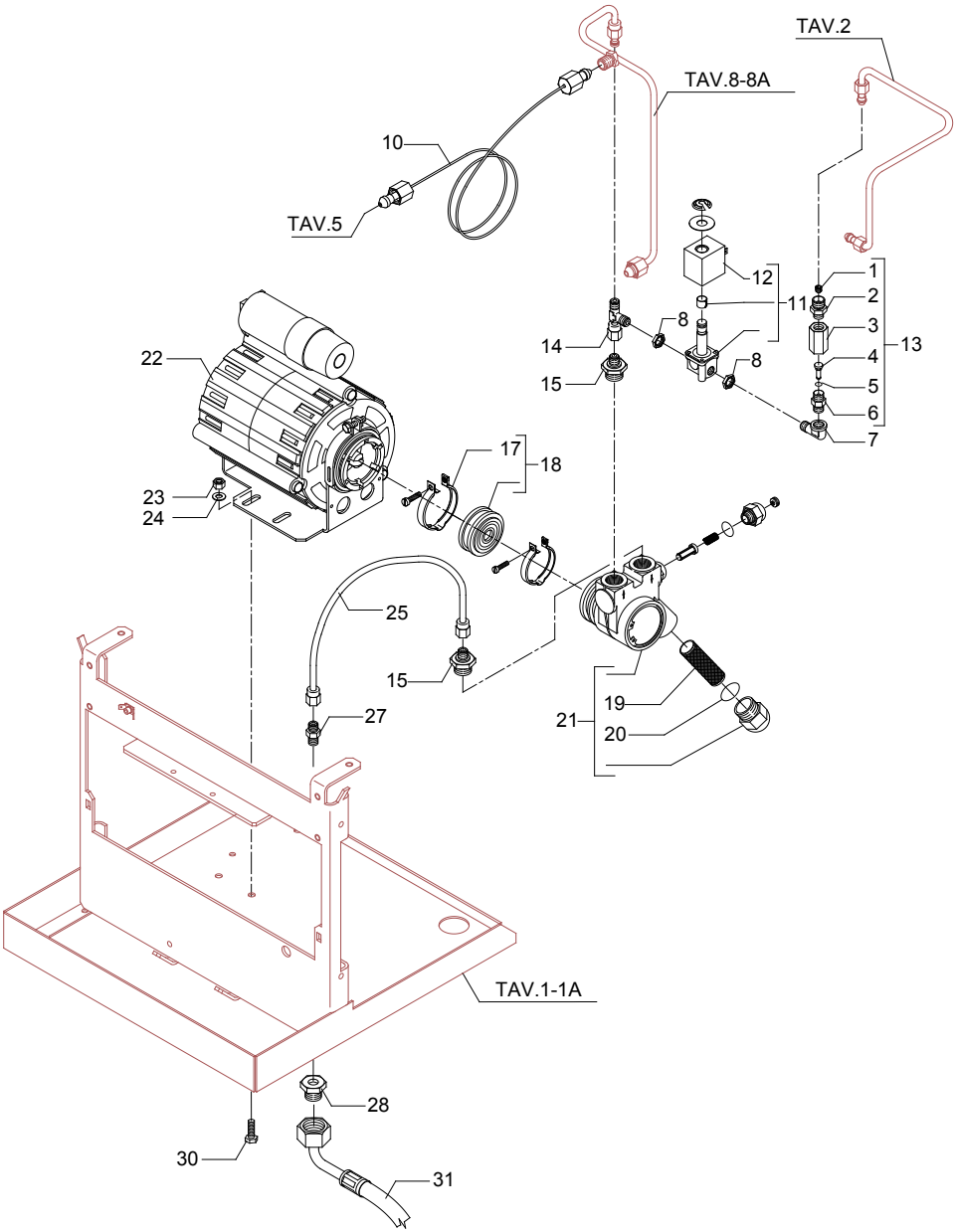
TAV.2
TAV.8-8A
10
TAV.5
12
1
11
2
8
3
13
14
8
4
15
5
6
7
22
17
18
23
24
25
15
27
19
21
20
TAV.1-1A
28
30
31

TABLE 7 (up to 27.04.09)

POS	CODE	DESCRIPTION
1	5162021LL	GROUP-SOLENOID VALVE HOSE
2	7303001TR	UNION ELBOW 1/8"G
3	7630332	SOLENOID VALVE COIL 115V PARKER
3	7630331	SOLENOID VALVE COIL 230V PARKER
3	7630330	SOLENOID VALVE COIL 240V PARKER
4	5162017LL	EXCHANGER-GROUP SOLENOID VALVE HOSE
5	7701112	SOLENOID VALVE 3 WAY 115V PARKER
5	7702311	SOLENOID VALVE 3 WAY 230V PARKER
5	7702410	SOLENOID VALVE 3 WAY 240V PARKER
6	5221813	CAP NUT M12
7	5492008	GASKET D10.5 X 2
8	5283018	DRAIN FITTING FOR SURPRESSION VALVE 1/8"G OT CHROMED
9	5973055	ASSEMBLY BANJO UNION
10	5194560LL	SOLENOID VALVE DRAIN HOSE
12	5221844	NUT 1/8"G H3
13	5162040LL	BOILER DRAIN HOSE
14	5302019	FITTING M13 X ES.15 H25.5 OT
15	7451501	BALL COCK FF 1/4"G
16	7304506	FITTING 1/4" X 1/8"G OT
17	7703014	SOLENOID VALVE WITHOUT COIL PARKER

TABLE 7 (up to 27.04.09)

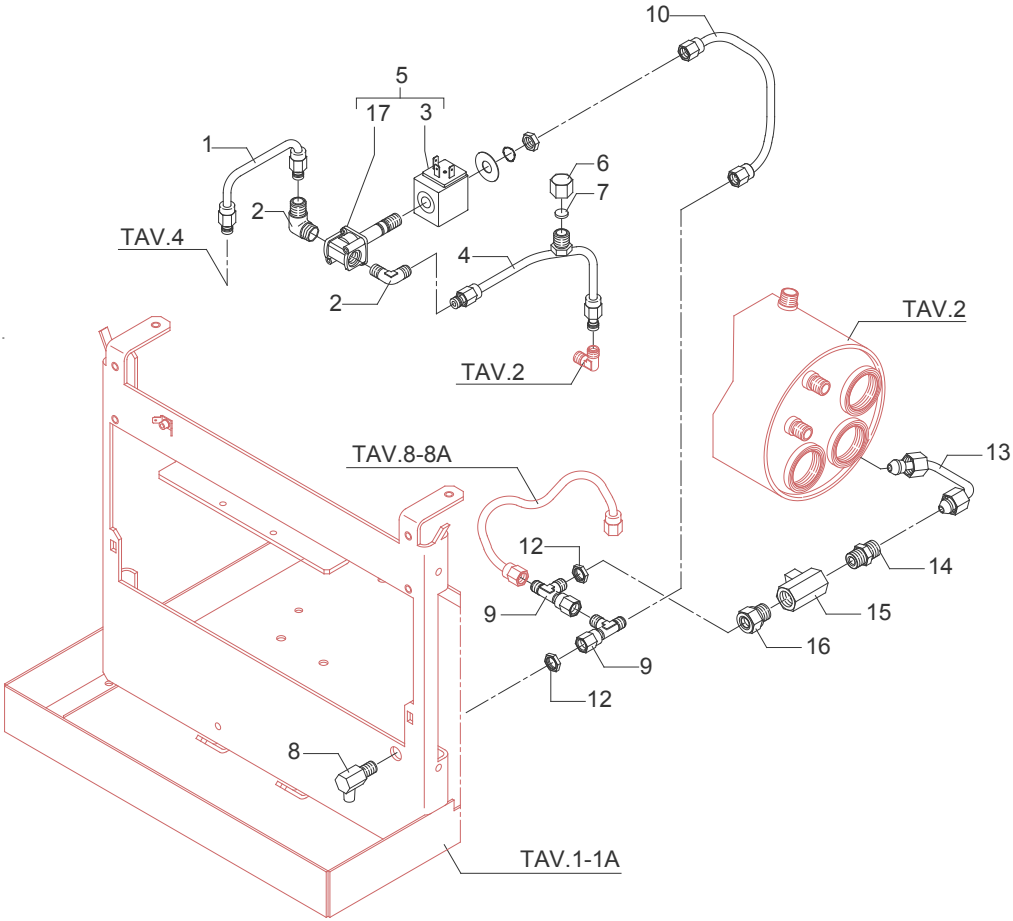

TABLE 7 (up to 01.04.13)

POS	CODE	DESCRIPTION
1	5162021LL	GROUP-SOLENOID VALVE HOSE
2	7303001TR	UNION ELBOW 1/8"G
4	5162017LL	EXCHANGER-GROUP SOLENOID VALVE HOSE
5	7701117	SOLENOID VALVE 3 WAY 115V ODE
5	7702316	SOLENOID VALVE 3 WAY 230V ODE
5	7702411	SOLENOID VALVE 3 WAY 240V ODE
6	5221813	CAP NUT M12
7	5492008	GASKET D10.5 X 2
8	5283018	DRAIN FITTING FOR SURPRESSION VALVE 1/8"G OT CHROMED
9	5973055	ASSEMBLY BANJO UNION
10	5194560LL	SOLENOID VALVE DRAIN HOSE
12	5221844	NUT 1/8"G H3
13	5162040LL	BOILER DRAIN HOSE
14	5302019	FITTING M13 X ES.15 H25.5 OT
15	7451501	BALL COCK FF 1/4"G
16	7304506	FITTING 1/4" X 1/8"G OT

TABLE 7 (up to 01.04.13)

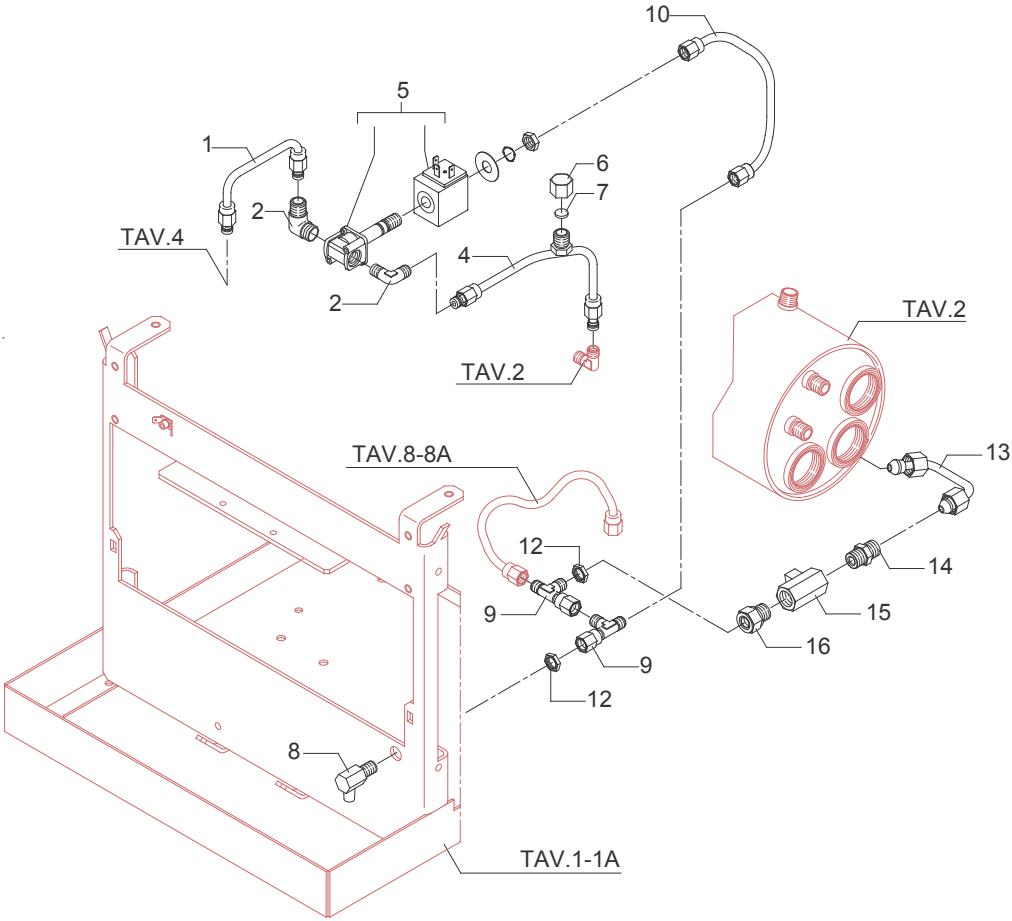

TABLE 7 (from 02.04.13)

POS	CODE	DESCRIPTION
1	5162021LL	GROUP-SOLENOID VALVE HOSE
2	7303001TR	UNION ELBOW 1/8”G
3	7630332	SOLENOID VALVE COIL 115V PARKER
3	7630331	SOLENOID VALVE COIL 230V PARKER
3	7630330	SOLENOID VALVE COIL 240V PARKER
4	5162017LL	EXCHANGER-GROUP SOLENOID VALVE HOSE
5	7701112	SOLENOID VALVE 3 WAY 115V PARKER
5	7702311	SOLENOID VALVE 3 WAY 230V PARKER
5	7702410	SOLENOID VALVE 3 WAY 240V PARKER
6	5221813	CAP NUT M12
7	5492008	GASKET D10.5 X 2
8	5283018	DRAIN FITTING FOR SURPRESSION VALVE 1/8”G OT CHROMED
9	5973055	ASSEMBLY BANJO UNION
10	5194560LL	SOLENOID VALVE DRAIN HOSE
12	5221844	NUT 1/8”G H3
13	5162040LL	BOILER DRAIN HOSE
14	5302019	FITTING M13 X ES.15 H25.5 OT
15	7451501	BALL COCK FF 1/4”G
16	7304506	FITTING 1/4” X 1/8”G OT
17	7703014	SOLENOID VALVE WITHOUT COIL PARKER

TABLE 7 (from 02.04.13)

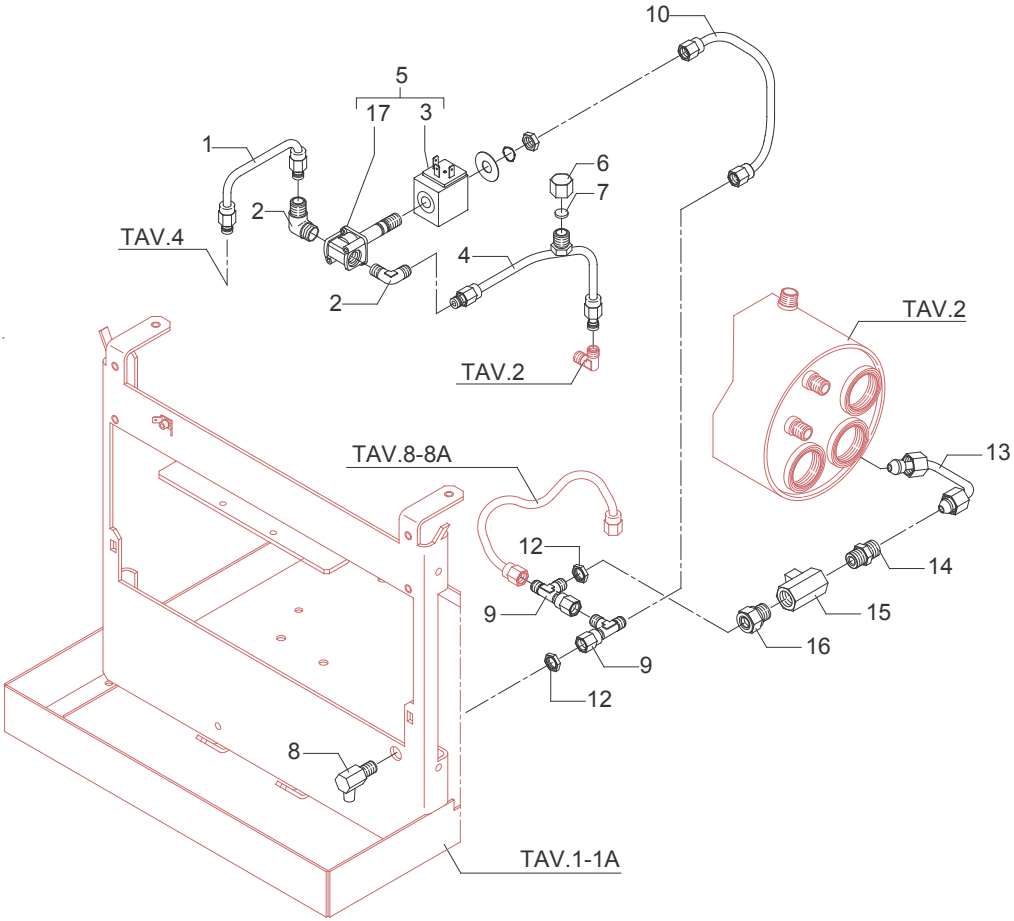

TABLE 8 (up to 31.01.10) Mod. PM - TE

POS	CODE	DESCRIPTION
1	5162020LL	SURPRESSION VALVE - HEAT EXCHANGER HOSE
2	5302028	STRAIGHT FITTING 1/4"G ES.16 H29.5 OT
3	5471505	CALIBRATED SPRING D0.45 H22 AISI 302
4	5224615TP	GASKET-HOLDER
5	5493001	GASKET D8 X 4 EPT 70SH
6	5194508LL	COMPLETE SURPRESSION VALVE HOSE
7	5302016	STRAIGHT FITTING 1/8"G X M12 H29 OT
8	5471506.01	CALIBRATED SPRING D1.1 H32 AISI 302
9	5222201	SPACER D16X12.2 H6.7 OT
10	5224609	GASKET-HOLDER D5.3
12	5283040	SURPRESSION VALVE BODY
13	5162018LL	SURPRESSION VALVE PUMP HOSE
14	5965025.01	ASSEMBLY COMPLETE SURPRESSION VALVE
15	7496018	OR GASKET 105 VITON

TABLE 8 (up to 31.01.10)
Mod. PM - TE

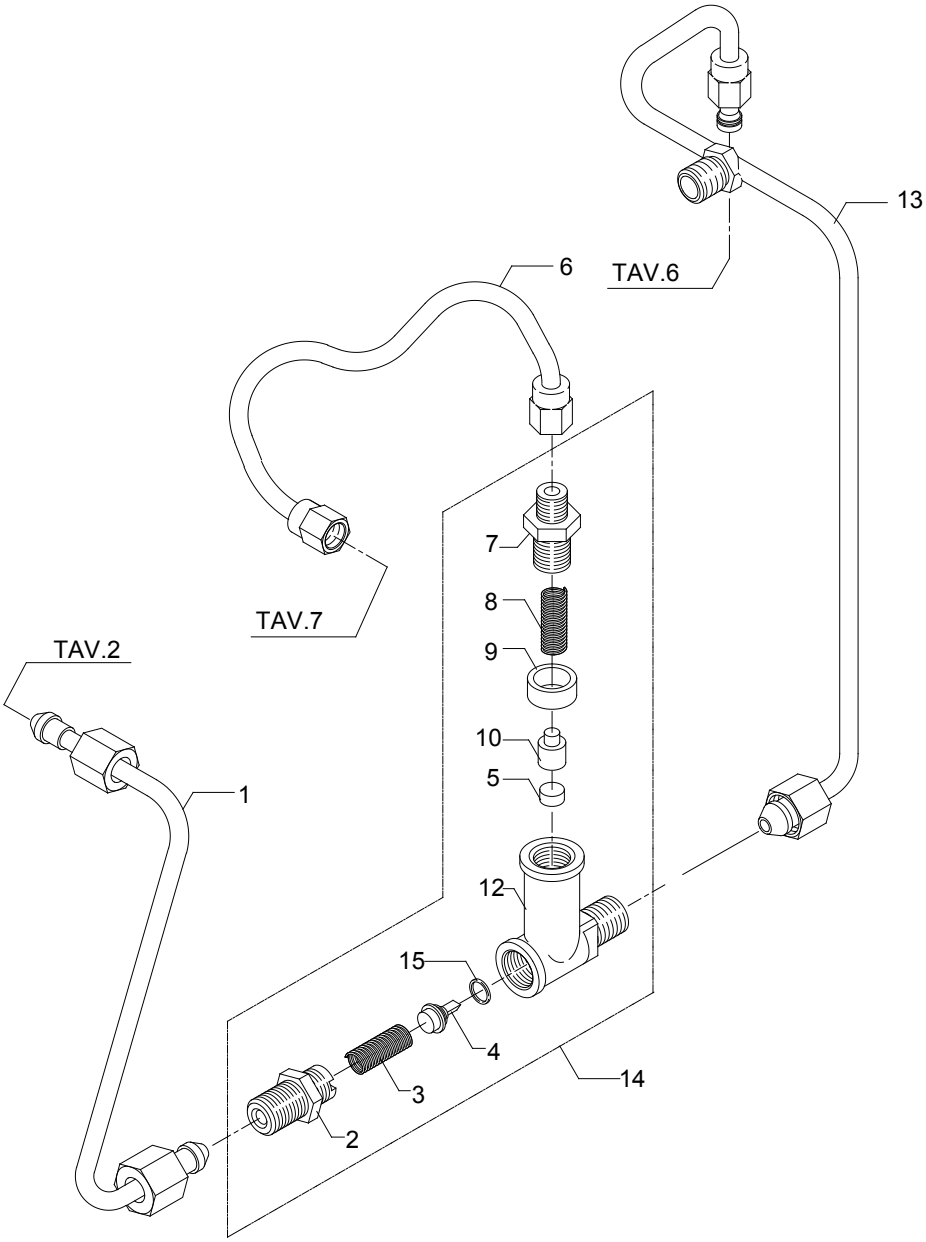

TABLE 8 (from 01.02.10) Mod. PM - TE

POS	CODE	DESCRIPTION
1	5162020LL	SURPRESSION VALVE - HEAT EXCHANGER HOSE
2	5302028	STRAIGHT FITTING 1/4"G ES.16 H29.5 OT
3	5471505	CALIBRATED SPRING D0.45 H22 AISI 302
4	5224615TP	GASKET-HOLDER
5	5493001	GASKET D8 X 4 EPT 70SH
6	5194508.01LL	COMPLETE SURPRESSION VALVE HOSE
7	5302072	RUBBER-HOLDER FITTING
8	5471506.01	CALIBRATED SPRING D1.1 H32 AISI 302
9	7496052	OR GASKET 114 VITON
10	5224619	GASKET-HOLDER
12	5283048	SURPRESSION VALVE BODY
13	5162018LL	SURPRESSION VALVE PUMP HOSE
14	5965166	ASSEMBLY COMPLETE SURPRESSION VALVE 12BAR
15	7496018	OR GASKET 105 VITON

TABLE 8 (from 01.02.10)
Mod. PM - TE

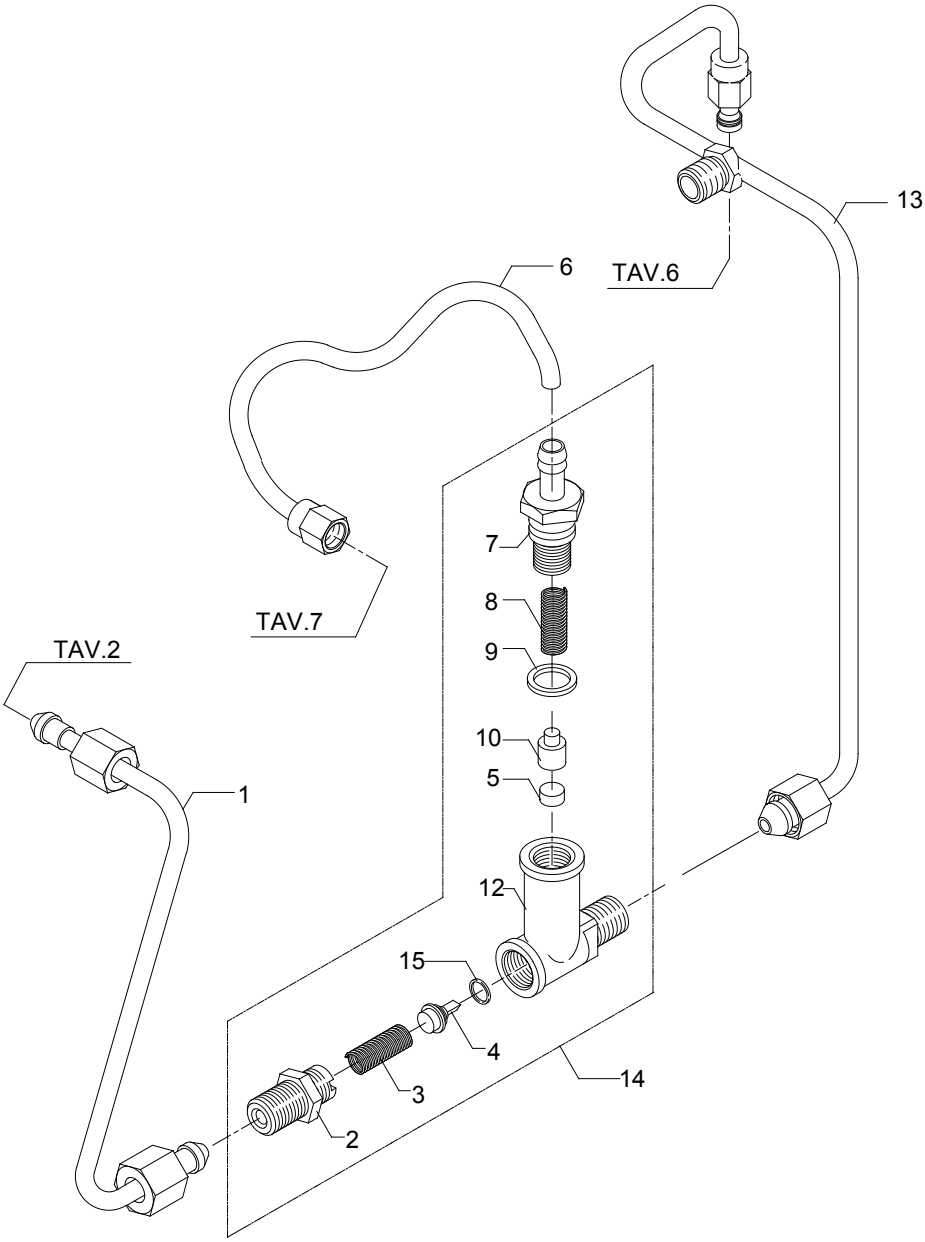

TABLE 8A (up to 31.01.10) Mod. DE

POS	CODE	DESCRIPTION
1	5162020LL	SURPRESSION VALVE - HEAT EXCHANGER HOSE
2	5302028	STRAIGHT FITTING 1/4"G ES.16 H29.5 OT
3	5471505	CALIBRATED SPRING D0.45 H22 AISI 302
4	5224615TP	GASKET-HOLDER
5	5493001	GASKET D8 X 4 EPT 70SH
6	5194508LL	COMPLETE SURPRESSION VALVE HOSE
7	5302016	STRAIGHT FITTING 1/8"G X M12 H29 OT
8	5471506.01	CALIBRATED SPRING D1.1 H32 AISI 302
9	5222201	SPACER D16X12.2 H6.7 OT
10	5224609	GASKET-HOLDER D5.3
12	5283040	SURPRESSION VALVE BODY
13	5162151LL	SURPRESSION VALVE PUMP HOSE
14	5965025.01	ASSEMBLY COMPLETE SURPRESSION VALVE
15	5302009	STRAIGHT FITTING M12 X 1/4"G H24 OT
16	5191501	SPACER D11X8X6.5 PTFE
17	5471001	NET FILTER D11 AISI 304
18	7431001	FLOW METER + AUT. WITH LED
19	7496020	OR GASKET 2112 VITON
20	5221821	NUT 1/4"G H5 OT
21	7496018	OR GASKET 105 VITON

TABLE 8A (up to 31.01.10)
Mod. DE

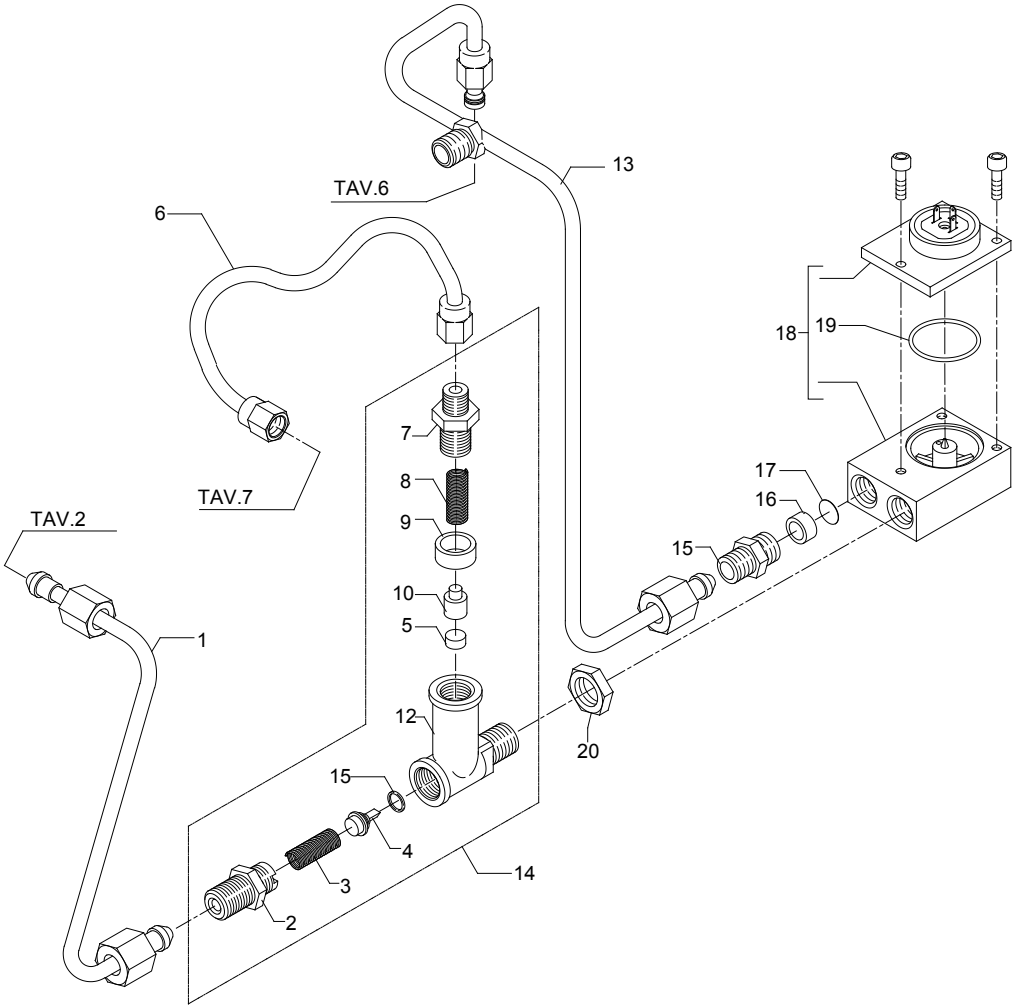

TABLE 8A (from 01.02.10) Mod. DE

POS	CODE	DESCRIPTION
1	5162020LL	SURPRESSION VALVE - HEAT EXCHANGER HOSE
2	5302028	STRAIGHT FITTING 1/4"G ES.16 H29.5 OT
3	5471505	CALIBRATED SPRING D0.45 H22 AISI 302
4	5224615TP	GASKET-HOLDER
5	5493001	GASKET D8 X 4 EPT 70SH
6	5194508.01LL	COMPLETE SURPRESSION VALVE HOSE
7	5302072	RUBBER-HOLDER FITTING
8	5471506.01	CALIBRATED SPRING D1.1 H32 AISI 302
9	7496052	OR GASKET 114 VITON
10	5224619	GASKET-HOLDER
12	5283048	SURPRESSION VALVE BODY
13	5162151LL	SURPRESSION VALVE PUMP HOSE
14	5965166	ASSEMBLY COMPLETE SURPRESSION VALVE 12BAR
15	7496018	OR GASKET 105 VITON
16	5191501	SPACER D11X8X6.5 PTFE
17	5471001	NET FILTER D11 AISI 304
18	7431001	FLOW METER + AUT. WITH LED
19	7496020	OR GASKET 2112 VITON
20	5221821	NUT 1/4"G H5 OT
21	7496018	OR GASKET 105 VITON

TABLE 8A (from 01.02.10)
Mod. DE

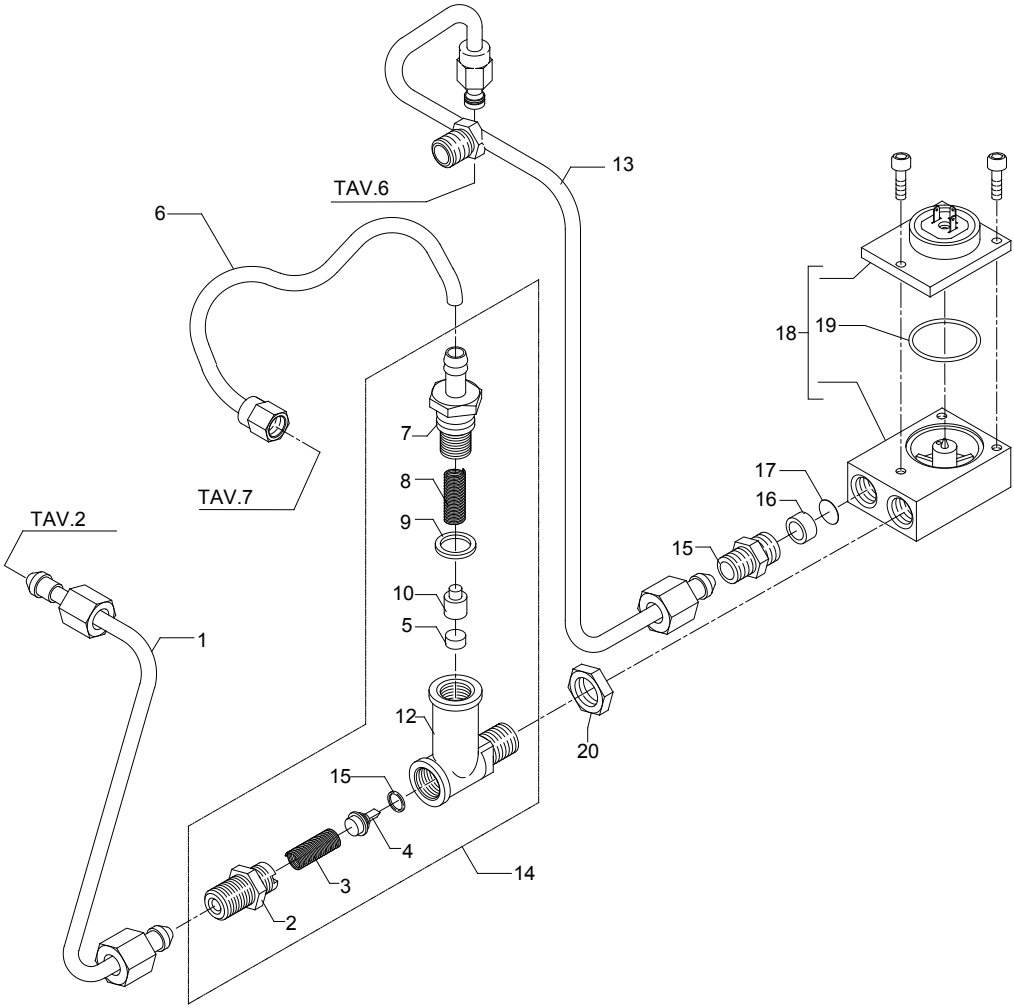

TABLE 9 (up to 31.03.10)

POS	CODE	DESCRIPTION
1	5373001	COFFEE-PRESS
2	5372101	MEASURER
3	5471003	BLIND FILTER
4	5471010	FILTER 1 CUP 5 GRAMS
4	5471004	FILTER 1 CUP 6 GRAMS
4	5471011	FILTER 1 CUP 8 GRAMS AISI 304
5	5471007	FILTER 2 CUPS 12 GRAMS
5	5471009	FILTER 2 CUPS 14 GRAMS AISI 304
6	5975506.03R	FILTER-HOLDER WITHOUT SPOUT GREY
7	5471527	FILTER-HOLDER SPRING D1.2 AISI 302
8	5286016TW	FILTER-HOLDER
9	7371502	KNOB POLISHED
10	7305006TW	SPOUT 1 WAY
10	7288505TW	SPOUT 1 WAY SHORT
11	7305007TW	SPOUT 2 WAY
11	7288501TW	SPOUT 2 WAY SHORT
12	5965586R	ASSEMBLY COMPLETE FILTER-HOLDER 1 CUP
12	5965603R	ASSEMBLY COMPLETE FILTER-HOLDER 1 CUP (WITH SHORT SPOUT)
13	5965587R	ASSEMBLY COMPLETE FILTER-HOLDER 2 CUPS
13	5965604R	ASSEMBLY COMPLETE FILTER-HOLDER 2 CUPS (WITH SHORT SPOUT)
14	5373915	PLUG
15	7990603	CLEANING BRUSH

TABLE 9 (up to 31.03.10)

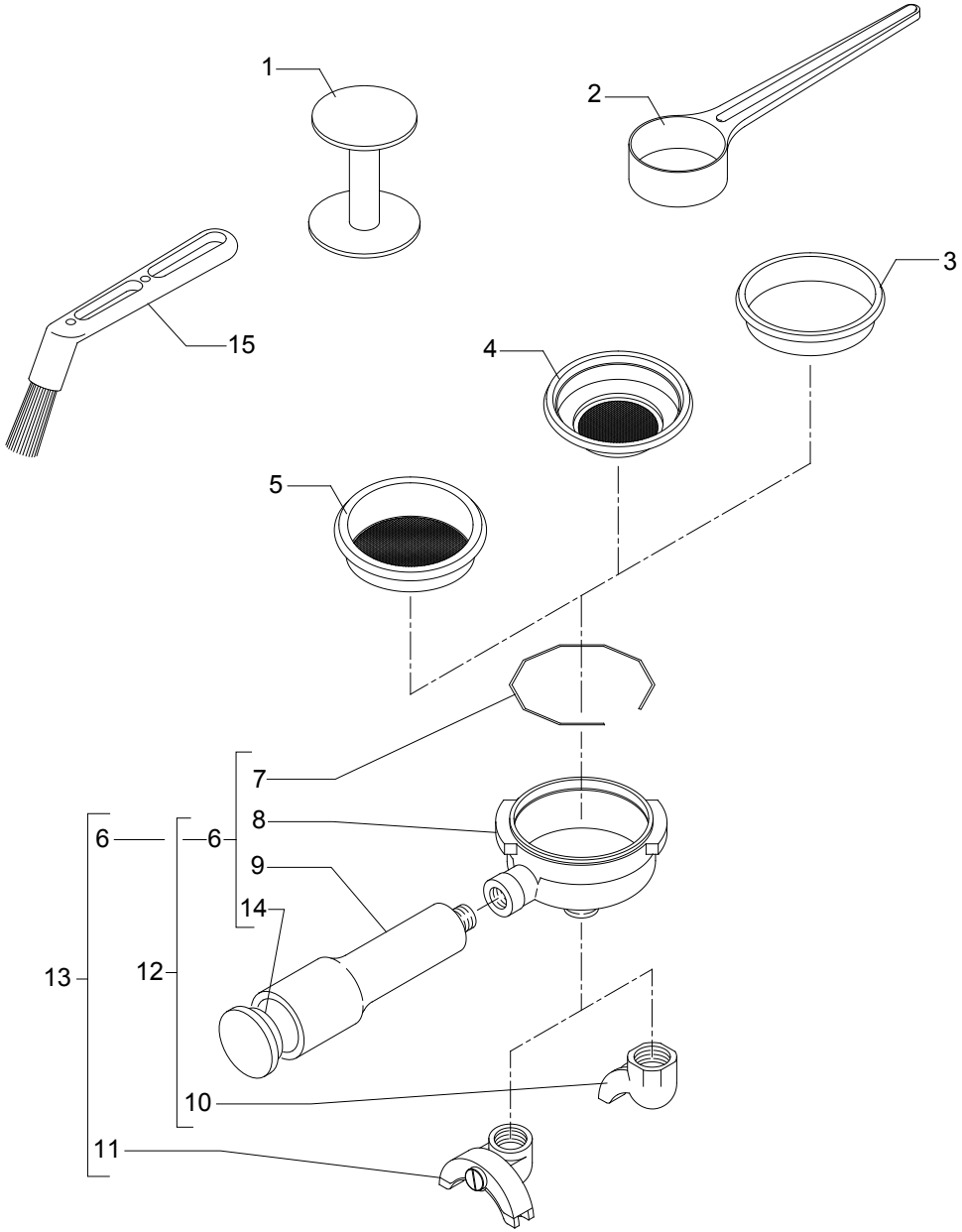

TABLE 9 (from 01.04.10)

POS	CODE	DESCRIPTION
1	5373001	COFFEE-PRESS
2	5372101	MEASURER
3	5471003	BLIND FILTER
4	5471023	FILTER 1 CUP 5 GRAMS WITH RUN CHANNEL
4	5471020	FILTER 1 CUP 6 GRAMS WITH RUN CHANNEL
4	5471031	FILTER 1 CUP 8 GRAMS WITH RUN CHANNEL
5	5471021	FILTER 2 CUPS 12 GRAMS WITH RUN CHANNEL
5	5471026	FILTER 2 CUPS 14 GRAMS WITH RUN CHANNEL
6	5975506.03R	FILTER-HOLDER WITHOUT SPOUT GREY
7	5471527	FILTER-HOLDER SPRING D1.2 AISI 302
8	5286016TW	FILTER-HOLDER
9	7371502	KNOB POLISHED
10	7305006TW	SPOUT 1 WAY
10	7288505TW	SPOUT 1 WAY SHORT
11	7305007TW	SPOUT 2 WAY
11	7288501TW	SPOUT 2 WAY SHORT
12	5965586R	ASSEMBLY COMPLETE FILTER-HOLDER 1 CUP
12	5965603R	ASSEMBLY COMPLETE FILTER-HOLDER 1 CUP (WITH SHORT SPOUT)
13	5965587R	ASSEMBLY COMPLETE FILTER-HOLDER 2 CUPS
13	5965604R	ASSEMBLY COMPLETE FILTER-HOLDER 2 CUPS (WITH SHORT SPOUT)
14	5373915	PLUG
15	7990603	CLEANING BRUSH

TABLE 9 (from 01.04.10)

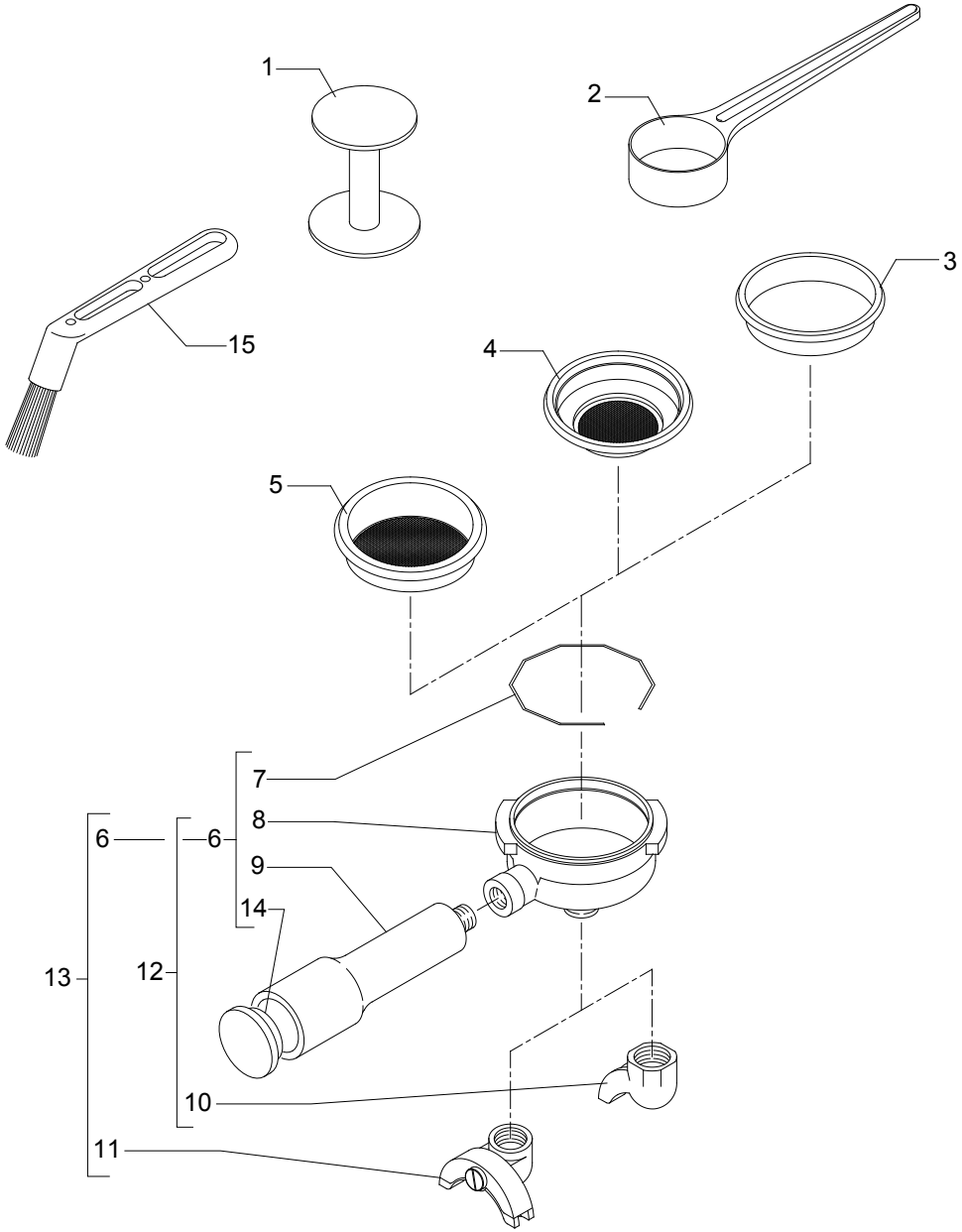

BEZZERA

Dal 1901

G.BEZZERA
MACCHINE PER CAFFE' ESPRESSO
Via Luigi Bezzera,1
20088 Rosate - Milano - Italy
Tel. ++39 02 90848102 r.a. - Telefax ++39 02 90870287
Web: www.g.bezzera.it
e-mail: commerciale@bezzera.it

Cod.9942015.08 ed.02/13 rev.00