BZ35

BEZZERA

Dal 1901

COD. 9942014.08

REV.00

TABLE 1 Mod. R PM

POS	CODE	DESCRIPTION
1	5076312LW	CUPS-HEATER GRID
2	7817801	SCREW TPS M4 X 16
3	5221846	WASHER FOR SPRING D4 H3 OT NICKEL-PLATED
4	5344002	COMPLETE CUPS-HEATER
5	5344001YE	ASSEMBLY BODY WHITE
5	5344004	ASSEMBLY BODY STAINLESS STEEL SATINED
5	5344006	ASSEMBLY BODY STAINLESS STEEL SATINED
5	5344001VM	ASSEMBLY BODY BLACK
5	5344020VM	ASSEMBLY BODY BLACK
5	5344001VT	ASSEMBLY BODY RED RAL 3000
5	5344020VT	ASSEMBLY BODY RED RAL 3000
5	5344001YA	ASSEMBLY BODY RED RAL 3005
5	5344020YA	ASSEMBLY BODY RED RAL 3005
6	7816404	SCREW TE M4X10 UNI 5739 A2
7	5074324SG	WORKING FRONTAL PANEL SILCKSCREENED
8	5074209LL	GROUP FRONTAL
9	5074544LW	DRIP TRAY GRID
10	5373604	DRIP TRAY ABS BLACK
11	7821401	NUT M8 UNI 5587 OT
12	5344003LL	ASSEMBLY CHASSIS
13	7814002	NOTCHED WASHER D5 DIN 6798A A2
14	7816004	SCREW TCEI M4 X 16
15	7474201	FEET D40X50 M8X18.5 RUBBER
16	7999904	ADHESIVE RUBBER TOP

TABLE 1
Mod. R PM

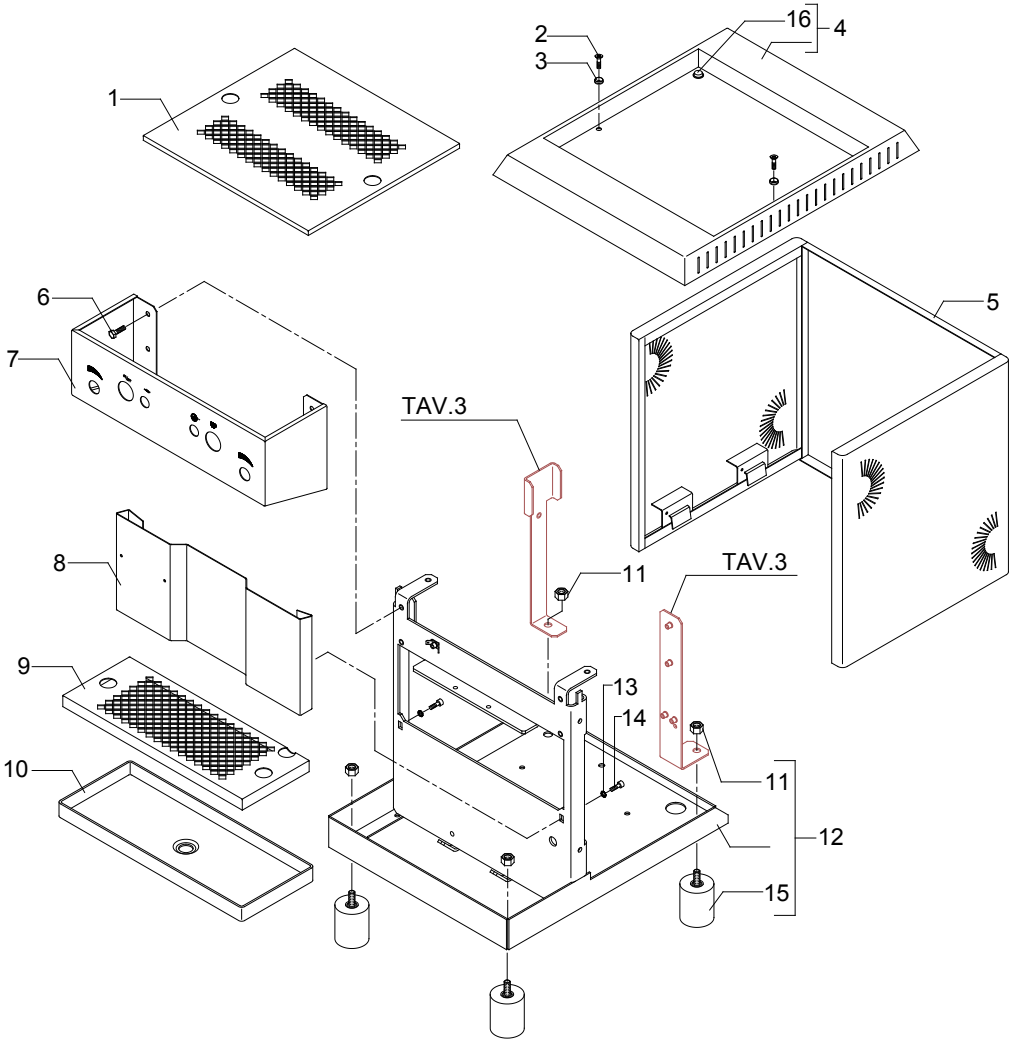

TABLE 1A Mod. R DE

POS	CODE	DESCRIPTION
1	5076312LW	CUPS-HEATER GRID
2	7817801	SCREW TPS M4 X 16
3	5221846	WASHER FOR SPRING D4 H3 OT NICKEL-PLATED
4	5344002	COMPLETE CUPS-HEATER
5	5344001YE	ASSEMBLY BODY WHITE
5	5344004	ASSEMBLY BODY STAINLESS STEEL SATINED
5	5344006	ASSEMBLY BODY STAINLESS STEEL SATINED
5	5344001VM	ASSEMBLY BODY BLACK
5	5344020VM	ASSEMBLY BODY BLACK
5	5344001VT	ASSEMBLY BODY RED RAL 3000
5	5344020VT	ASSEMBLY BODY RED RAL 3000
5	5344001YA	ASSEMBLY BODY RED RAL 3005
5	5344020YA	ASSEMBLY BODY RED RAL 3005
6	7816404	SCREW TE M4X10 UNI 5739 A2
7	5074327SG	WORKING FRONTAL PANEL WITH DIAPHRAGM
8	5074209LL	GROUP FRONTAL
9	5074544LW	DRIP TRAY GRID
10	5373604	DRIP TRAY ABS BLACK
11	7821401	NUT M8 UNI 5587 OT
12	5344003LL	ASSEMBLY CHASSIS
13	7814002	NOTCHED WASHER D5 DIN 6798A A2
14	7816004	SCREW TCEI M4 X 16
15	7474201	FEET D40X50 M8X18.5 RUBBER
16	7999904	ADHESIVE RUBBER TOP
17	5660506	MEMBRANE 52 X 60

TABLE 1A
Mod. R DE

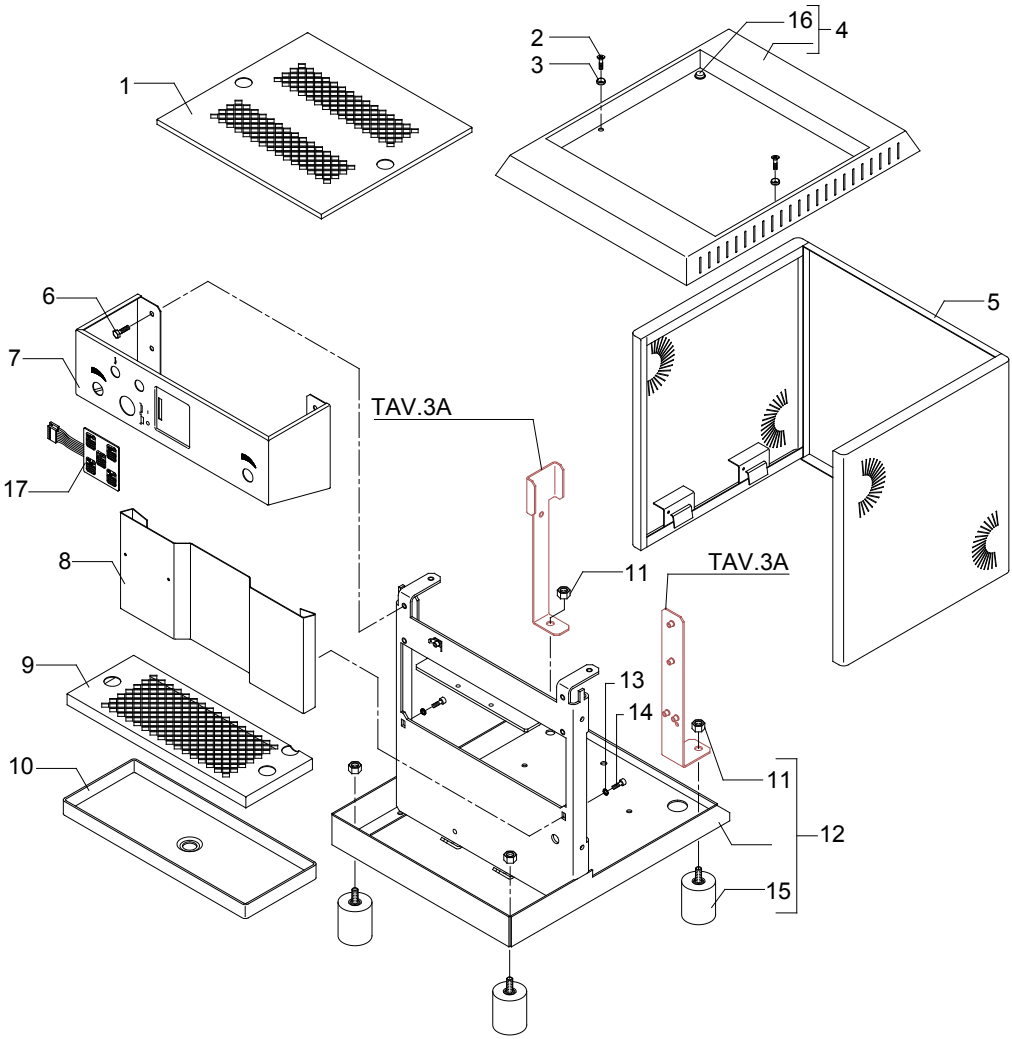

TABLE 1B Mod. S PM

POS	CODE	DESCRIPTION
1	5076314LW	CUPS-HEATER GRID
2	7817801	SCREW TPS M4 X 16
3	5221846	WASHER FOR SPRING D4 H3 OT NICKEL-PLATED
4	5344028	COMPLETE CUPS-HEATER
5	5344001YE	ASSEMBLY BODY WHITE
5	5344004	ASSEMBLY BODY STAINLESS STEEL SATINED
5	5344006	ASSEMBLY BODY STAINLESS STEEL SATINED
5	5344001VM	ASSEMBLY BODY BLACK
5	5344020VM	ASSEMBLY BODY BLACK
5	5344001VT	ASSEMBLY BODY RED RAL 3000
5	5344020VT	ASSEMBLY BODY RED RAL 3000
5	5344001YA	ASSEMBLY BODY RED RAL 3005
5	5344020YA	ASSEMBLY BODY RED RAL 3005
6	7816404	SCREW TE M4X10 UNI 5739 A2
7	5074324SG	WORKING FRONTAL PANEL SILCKSCREENED PM
8	5074209LL	GROUP FRONTAL
9	5074544LW	DRIP TRAY GRID
10	5373604	DRIP TRAY ABS BLACK
11	7821401	NUT M8 UNI 5587 OT
12	5344003LL	ASSEMBLY CHASSIS
13	7814002	NOTCHED WASHER D5 DIN 6798A A2
14	7816004	SCREW TCEI M4 X 16
15	7474201	FEET D40X50 M8X18.5 RUBBER
16	7999904	ADHESIVE RUBBER TOP
17	5225230	FITTING 3/8”
18	5492022	GASKET D25 X 17 X 2
19	5221819	CAP NUT 3/8”

TABLE 1B
Mod. S PM

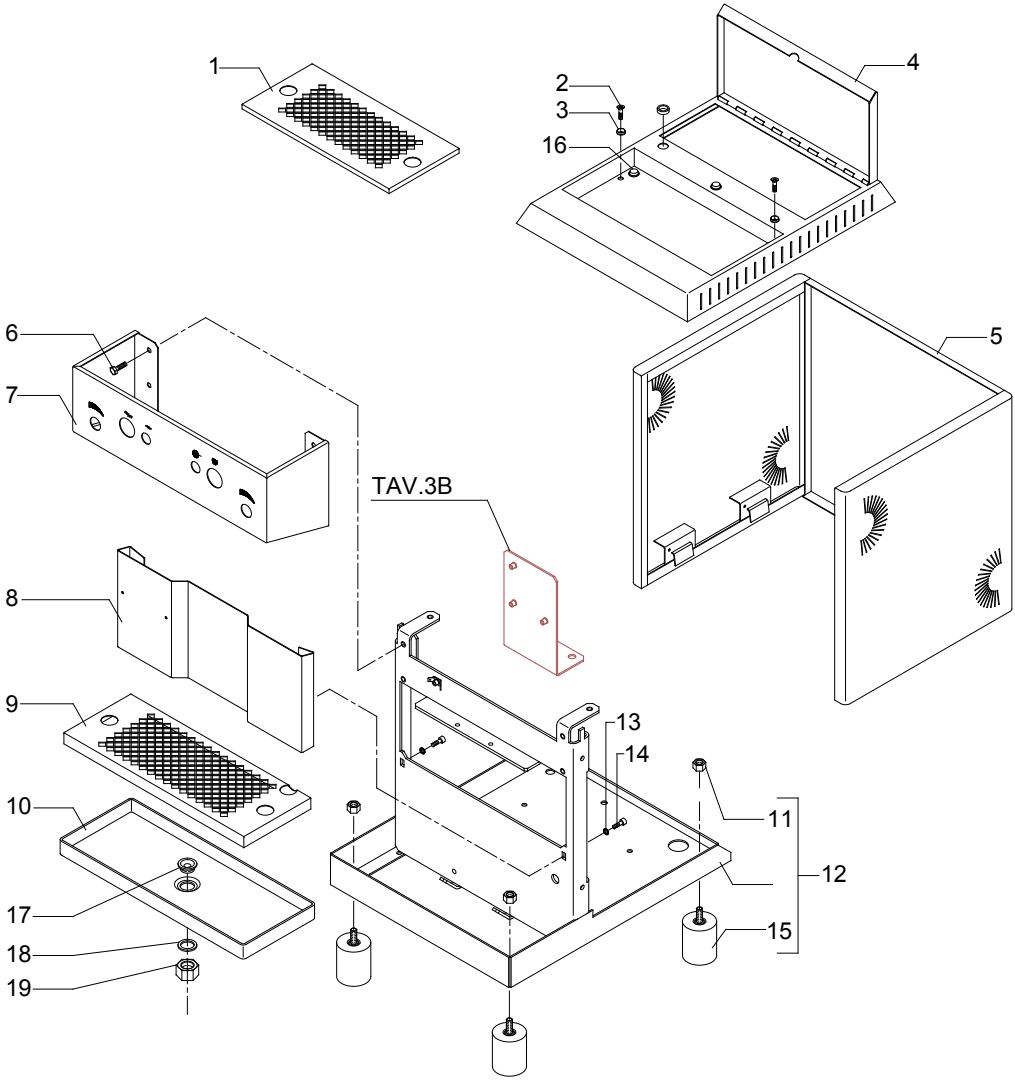

TABLE 2 Mod. R DE - R PM

POS	CODE	DESCRIPTION
1	7433008	PRESSOSTAT XP/100 1/4"G CALIBRATION 1.2 BAR
1	7433002	PRESSOSTAT XP/100 1/4"G CALIBRATION 1 BAR
1	7433024	PRESSOSTAT SIRAI P303T01
2	5162043LL	COMPLETE HOSE FOR PRESSOSTAT
3	5265819	LEVEL PROBE D3 X 80 X 6.3
4	5225205	STRAIGHT FITTING M10 OT
5	5192001	PROBE SHEATH D8 X 45 HOLE D3 PTFE
7	5265812	MINIMUM LEVEL PROBE D3 X 110 X 4.8
9	5162044LL	COMPLETE HOSE FOR STEAM TAP
10	5302005	STRAIGHT FITTING 3/8"G X M13 ES.22 H30 OT
11	5320501.01BL	ASSEMBLY BOILER POLISHED
12	5162045LL	COMPLETE HOSE FOR WATER TAP
13	5192306	SUCTION HOSE L=100MM PTFE
14	5058408LL	COMPLETE THERMIC SAFETY DEVICE SUPPORT
15	7634819	THERMIC SAFETY DEVICE 250V 130°C
16	7816017	SCREW TCEI M4 X 6 UNI5931 A2
17	5221840	CAP NUT M13X1
18	5495007	GASKET D32 X 3 BRASS
19	5329005.01BL	ASSEMBLY EXCHANGER HOSE POLISHED
20	5492004	GASKET D42 X 32 X 2 ASBESTOS FREE
21	5721127	HEATING ELEMENT 1350 110V (from 19.04.07)
21	5722240	HEATING ELEMENT 1250/1450W 220/240V
22	5192301	SUCTION HOSE D6 L=130MM PTFE
23	5162046LL	COMPLETE HOSE FOR WATER BOILER LOAD
24	5058415LW	PRESSOSTAT SUPPORT (up to 21/04/04)
25	5221821	NUT 1/4"G H5 OT (up to 21/04/04)
26	7816404	SCREW TE M4X10 UNI 5739 A2 (up to 21/04/04)
27	5302006TP	STRAIGHT FITTING 1/8"G X M12 OT
28	5492008	GASKET D10.5 X 2
29	5221813	CAP NUT M12
30	5227007	DOWEL M8 X 6 HOLE M4 OT
31	7634801	THERMIC SAFETY DEVICE 250V 125°C AUTOMATIC
32	5492020	GASKET D11.5 X 2

TABLE 2
Mod. R DE - R PM

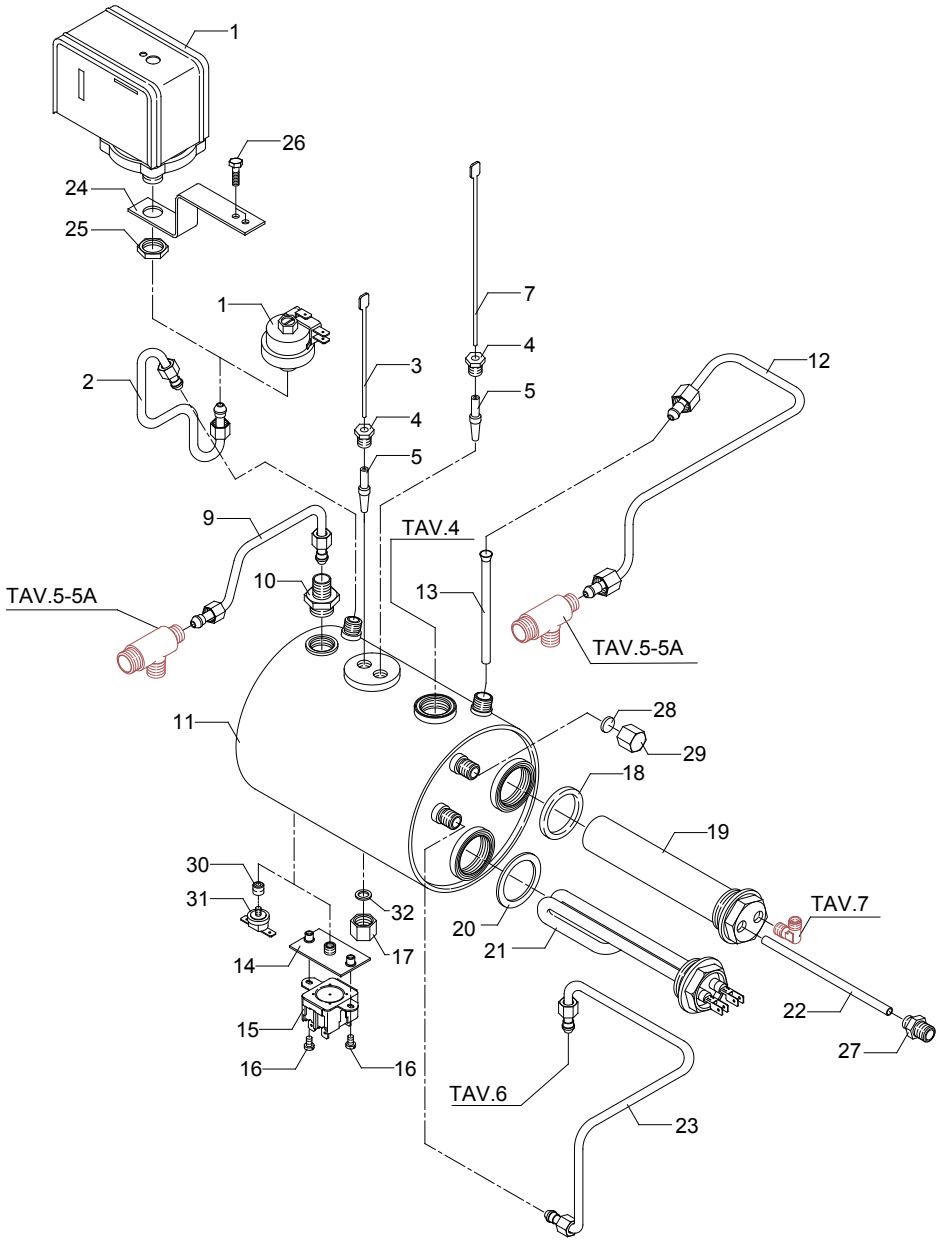

TABLE 2A Mod. S PM

POS	CODE	DESCRIPTION
1	7433008	PRESSOSTAT XP/100 1/4"G CALIBRATION 1.2 BAR
1	7433002	PRESSOSTAT XP/100 1/4"G CALIBRATION 1 BAR
2	5162248LL	COMPLETE HOSE FOR PRESSOSTAT
3	5265819	LEVEL PROBE D3 X 80 X 6.3
4	5225205	STRAIGHT FITTING M10 OT
5	5192001	PROBE SHEATH D8 X 45 HOLE D3 PTFE
7	5265812	MINIMUM LEVEL PROBE D3 X 110 X 4.8
9	5162044LL	COMPLETE HOSE FOR STEAM TAP
10	5302005	STRAIGHT FITTING 3/8"G X M13 ES.22 H30 OT
11	5320501.01BL	ASSEMBLY BOILER POLISHED
12	5162247LL	COMPLETE HOSE FOR WATER TAP
13	5192306	SUCTION HOSE L=100MM PTFE
14	5058408LL	COMPLETE THERMIC SAFETY DEVICE SUPPORT
15	7634819	THERMIC SAFETY DEVICE 250V 130°C
16	7816017	SCREW TCEI M4 X 6 UNI5931 A2
17	5221840	CAP NUT M13X1
18	5495007	GASKET D32 X 3 BRASS
19	5329005.01BL	ASSEMBLY EXCHANGER HOSE POLISHED
20	5492004	GASKET D42 X 32 X 2
21	5721127	HEATING ELEMENT 1350 110V (from 19.04.07)
21	5722240	HEATING ELEMENT 1250/1450W 220/240V
22	5192301	SUCTION HOSE D6 L=130MM PTFE
23	5162246LL	EXCHANGER- SURPRESSION VALVE HOSE
24	5302006TP	STRAIGHT FITTING 1/8"G X M12 OT
25	5492008	GASKET D10.5 X 2
26	5221813	CAP NUT M12
27	5227007	DOWEL M8 X 6 HOLE M4 OT
28	7634801	MANUAL THERMIC SAFETY DEVICE 250V 125°C
29	5492020	GASKET D11.5 X 2

TABLE 2A
Mod. S PM

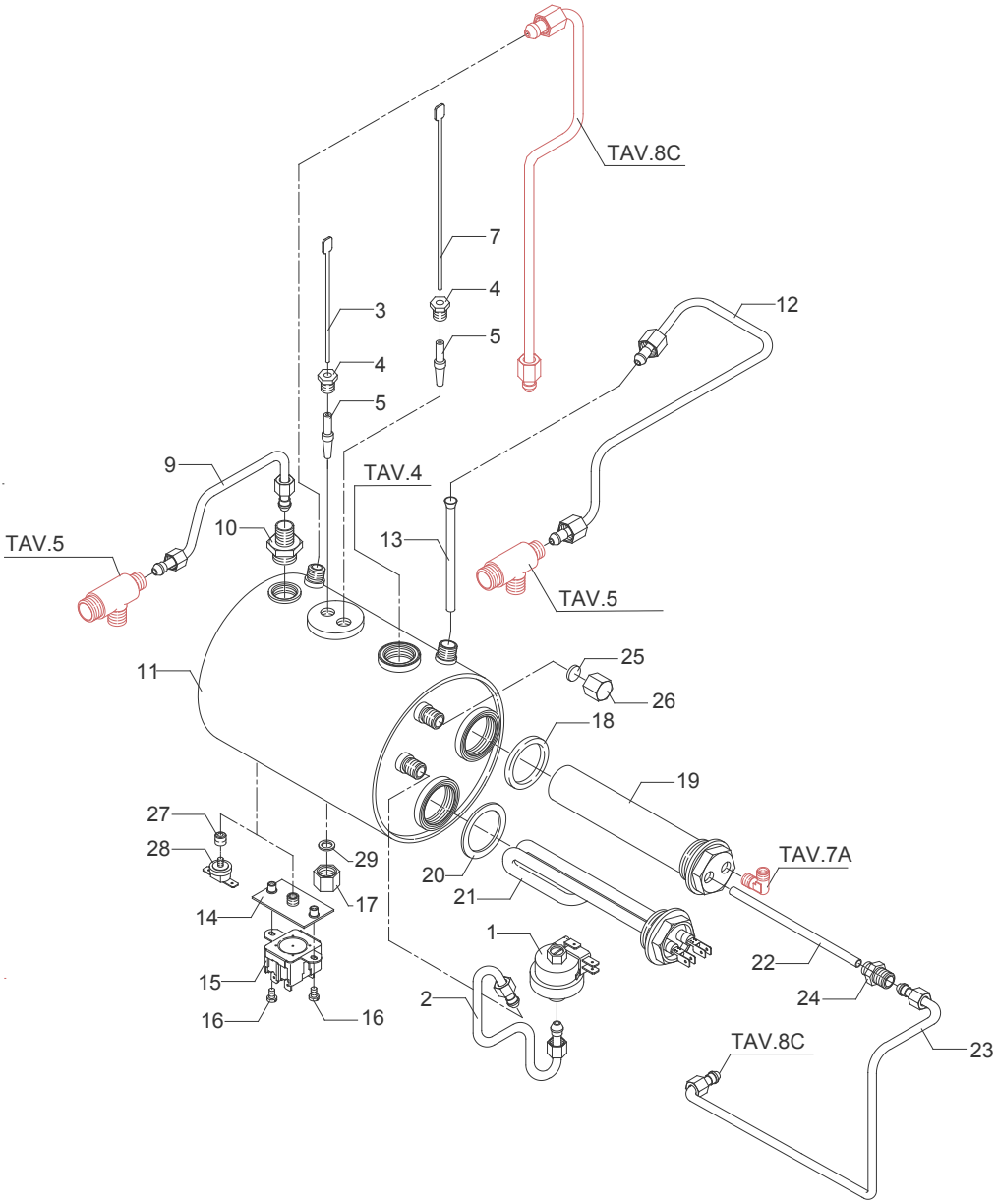

TABLE 3 Mod. R PM

POS	CODE	DESCRIPTION
1	5373603	DRIP TRAY ABS
2	7611501	CLAMP D22 FE
3	7303501	HOSE D22 L=2MT PLASTIC
4	5058407LL	LEVEL REGULATOR SUPPORT
5	7661011	LEVEL REGULATOR RL 40 2S 100/110V
5	7661012	LEVEL REGULATOR RL 40 2S 110/120V
5	7661003	LEVEL REGULATOR RL 30 2S 220/230V
5	7661013	LEVEL REGULATOR RL 40 2S 240V
6	7816004	SCREW TCEI M4 X 16
7	7614001	CABLE-PRESS PG16 POLYAMIDE
7	7614007	CABLE-PRESS PG13,5
8	7552001	CABLE WITH AUSTRALIAN PLUG
8	7555001	CABLE WITH SCHUKO PLUG
8	7551001	CABLE WITH USA PLUG 125V 15A
8	7551003	CABLE WITH USA PLUG 250V 20A
8	7554001	CABLE WITH ENGLISH PLUG
9	5038407LL	COMPLETE RELAY SUPPORT
10	7635418	RELAY 16A 110V 2 CONTACTS FASTON (from 22/04/04)
10	7635419	RELAY 16A 220/230V 2 CONTACTS FASTON (from 22/04/04)
10	7635420	RELAY 16A 240V 2 CONTACTS FASTON (from 22/04/04)
10	7635403	RELAY 30A 110V (up to 21/04/04)
10	7635410	RELAY 30A 220/230V (up to 21/04/04)
10	7635401	RELAY 30A 240V (up to 21/04/04)
11	7826201	SCREW TCI M4X10 UNI 6107 OT
12	7826211	SCREW TCI M4X30 UNI 6107 OT
13	7612503R	CLAMP 3 CONTACTS KL24/3
14	7614003	NUT PG16 POLYAMIDE
14	7614006	NUT PG13,5
15	7663005R	FILTER RC (from 22/04/04)
16	7612512	CLAMP 3 CONTACTS
17	5599917	CONNECTING CABLE CLAMP

TABLE 3
Mod. R PM

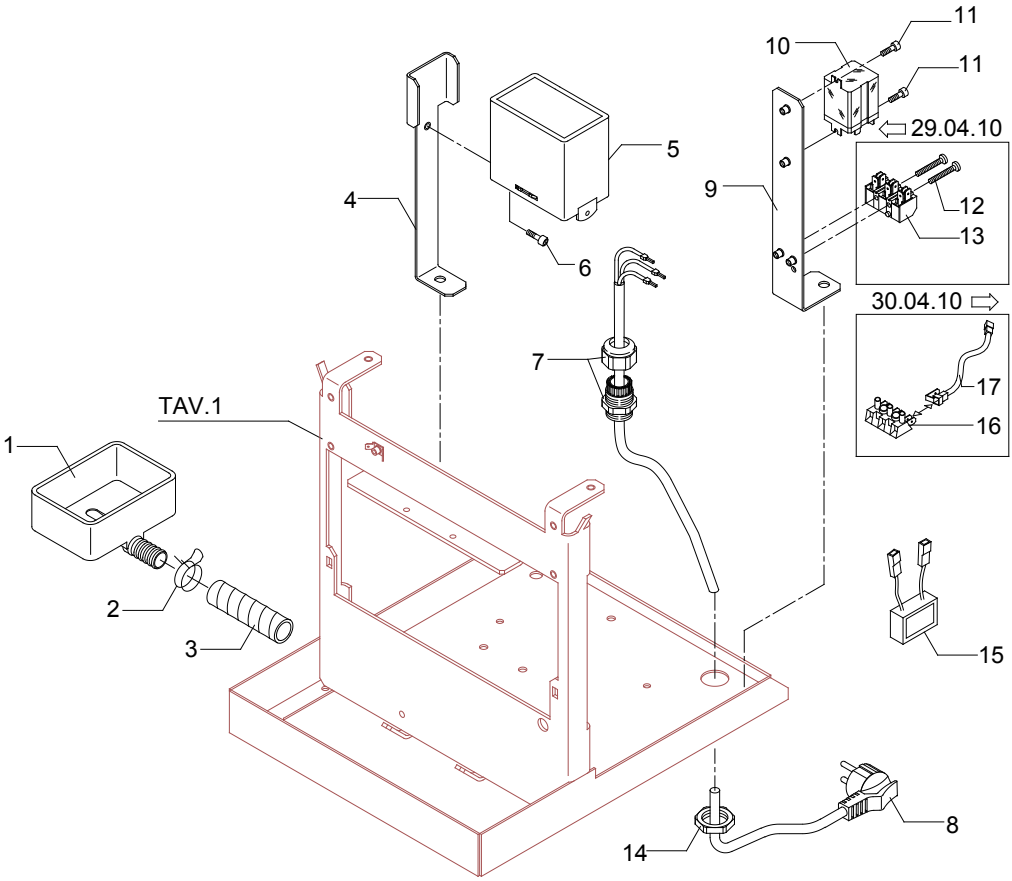

TABLE 3A Mod. R DE

POS	CODE	DESCRIPTION
1	5373603	DRIP TRAY ABS
2	7611501	CLAMP D22 FE
3	7303501	HOSE D22 L=2MT PLASTIC
4	5058407LL	LEVEL REGULATOR SUPPORT
5	7662612	DOSAGE 1GR. FASTON 115V 3 PROBES
5	7662616	DOSAGE 1GR FASTON 220/230V 3 PROBES
5	7662601	DOSAGE 1GR. FASTON 240 3 PROBES
6	7816004	SCREW TCEI M4 X 16
7	7614001	CABLE-PRESS PG16 POLYAMIDE
7	7614007	CABLE-PRESS PG13,5
8	7551001	CABLE WITH USA PLUG 125V 15A
8	7551003	CABLE WITH USA PLUG 250V 20A
8	7555001	CABLE WITH SCHUKO PLUG
8	7552001	CABLE WITH AUSTRALIAN PLUG
8	7554001	CABLE WITH ENGLISH PLUG
9	5038407LL	COMPLETE RELAY SUPPORT
10	7635418	RELAY 16A 110V 2 CONTACTS FASTON (from 22/04/04)
10	7635419	RELAY 16A 220/230V 2 CONTACTS FASTON (from 22/04/04)
10	7635420	RELAY 16A 240V 2 CONTACTS FASTON (from 22/04/04)
10	7635403	RELAY 30A 110V (up to 21/04/04)
10	7635410	RELAY 30A 220/230V (up to 21/04/04)
10	7635401	RELAY 30A 240V (up to 21/04/04)
11	7826201	SCREW TCI M4X10 UNI 6107 OT
12	7826211	SCREW TCI M4X30 UNI 6107 OT
13	7612503R	CLAMP 3 CONTACTS KL24/3
14	7614003	NUT PG16 POLYAMIDE
14	7614006	NUT PG13,5
15	7636603	STRIP-LINE 7 POLES
16	7663559	CONNECTING CABLE 8 POLES=0.7 MT
17	7663005R	FILTER RC (from 22/04/04)
18	7612512	CLAMP 3 CONTACTS
19	5599917	CONNECTING CABLE CLAMP

TABLE 3A
Mod. R DE

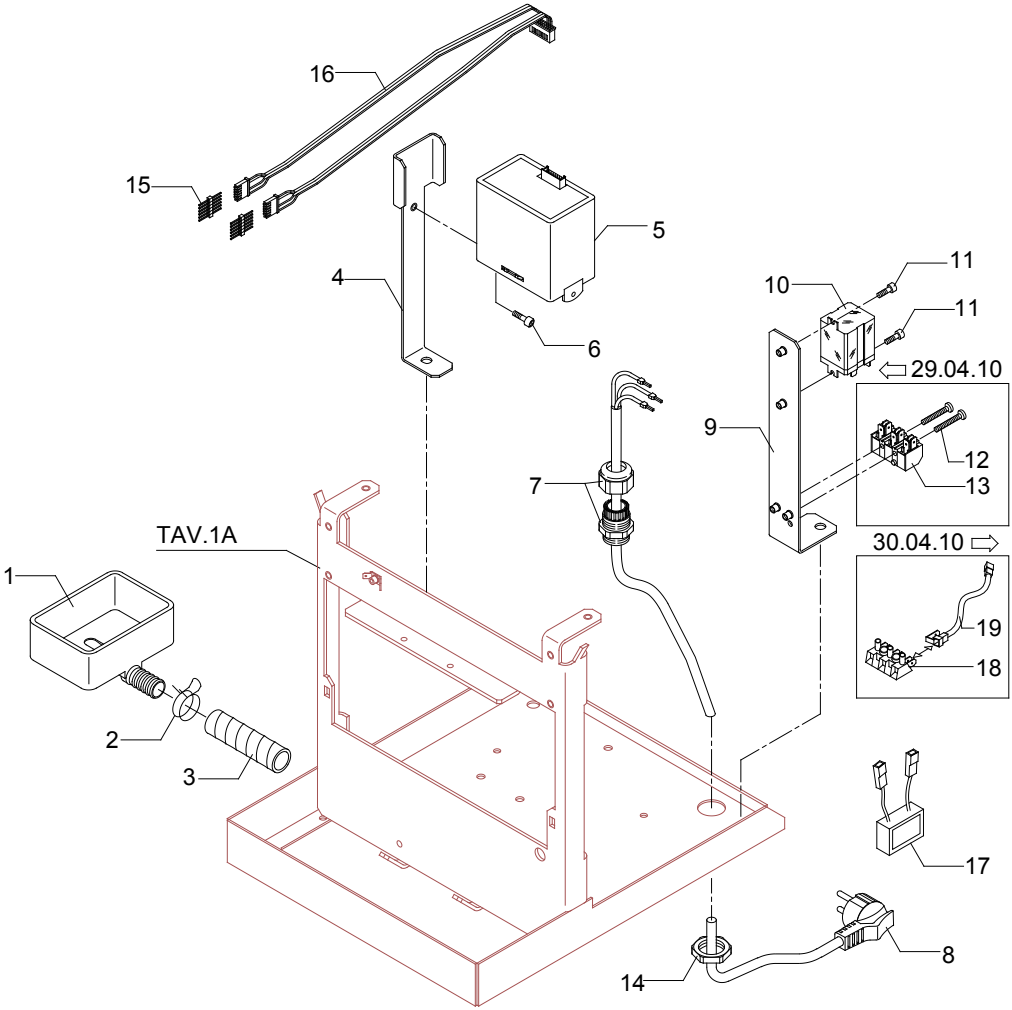

TABLE 3B Mod. S PM

POS	CODE	DESCRIPTION
4	5038417LL	LEVEL REGULATOR SUPPORT
5	7661011	LEVEL REGULATOR RL 40 2S 100/110V
5	7661012	LEVEL REGULATOR RL 40 2S 110/120V
5	7661003	LEVEL REGULATOR RL 30 2S 220/230V
5	7661013	LEVEL REGULATOR RL 40 2S 240V
6	7816004	SCREW TCEI M4 X 16
7	7614001	CABLE-PRESS PG16 POLYAMIDE
7	7614007	CABLE-PRESS PG13,5
8	7552001	CABLE WITH AUSTRALIAN PLUG
8	7555001	CABLE WITH SCHUKO PLUG
8	7551001	CABLE WITH USA PLUG 125V 15A
8	7551003	CABLE WITH USA PLUG 250V 20A
8	7554001	CABLE WITH ENGLISH PLUG
10	7635418	RELAY 16A 110V 2 CONTACTS FASTON
10	7635419	RELAY 16A 220/230V 2 CONTACTS FASTON
10	7635420	RELAY 16A 240V 2 CONTACTS FASTON
11	7826201	SCREW TCI M4X10 UNI 6107 OT
14	7614003	NUT PG16 POLYAMIDE
14	7614006	NUT PG13,5
15	7663005R	FILTER RC

TABLE 3B
Mod. S PM

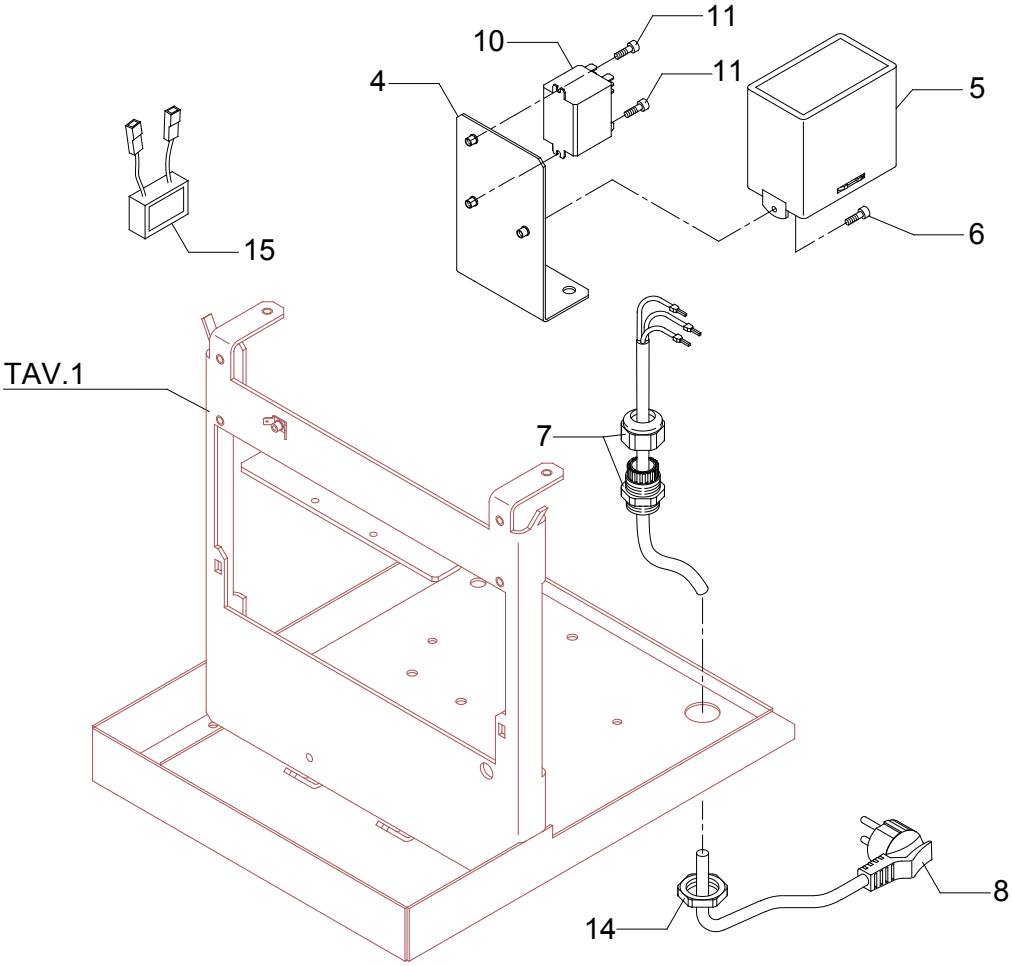

TABLE 4

POS	CODE	DESCRIPTION
1	5301508	UNION ELBOW M12 X 1/8"G OT
2	5162047LL	HOSE FOR SOLENOID VALVE OF GROUP
3	7816416	SCREW TE M6X12 UNI 5739 A2
4	7804002	FAN WASHER D6 DIN 6798A
5	5226202	COUPLING RING SUPPORT H15 BRASS
6	7816001	SCREW TCEI M5X12 UNI 5931 A2
7	7492003	GASKET D6.5
9	7496004	OR GASKET 139
10	5280505TW	COUPLING RING CHROMED WITH FLAT GASKET
11	7493016	GASKET H 9,3 NBR 75SH
12	5285501TP	SHOWER-HOLDER D57OT
13	5470501	SHOWER D57 AISI 304
14	7817001	SCREW TPS M5X16 DIN 963 A2
16	5965015.01	ASSEMBLY SAFETY VALVE 1.5 BAR
17	5963047	COMPLETE CUP

TABLE 4

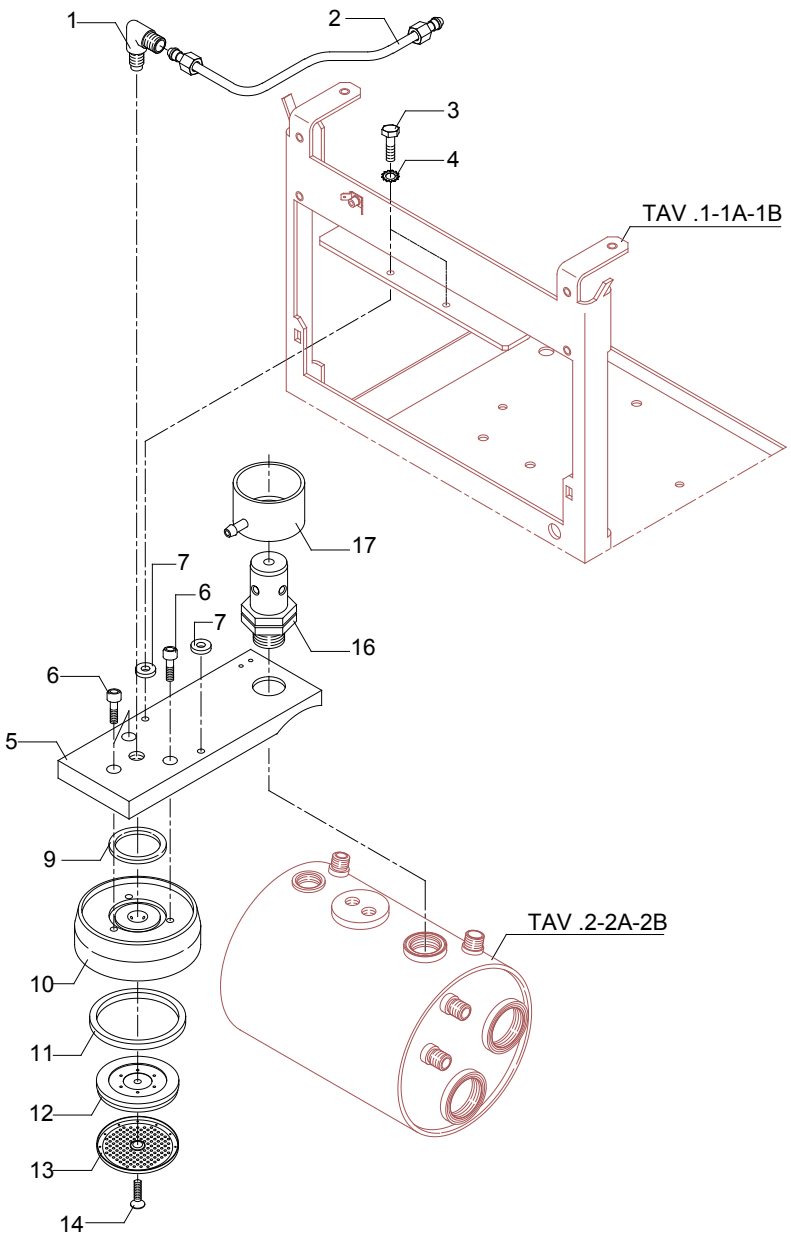

TABLE 5 Mod. R PM - S PM

POS	CODE	DESCRIPTION
1	5373901	STEAM PLUG D21
2	7816205	SCREW TCI M4X10 UNI 6107 OT
3	7814001	WASHER Ø 4
4	5974001.01	COMPLETE STEAM TAP
5	5221802CM	NUT 3/8"G H11.5 OT CHROMED
6	7633303	ROUND YELLOW SWITCH
7	7633609	ORANGE LAMP 110/240V
8	7633610	GREEN LAMP 110/240V
9	7633304	ROUND GREEN SWITCH
10	5373902	WATER PLUG
11	5960505	ASSEMBLY ADJUSTMENT ROD
12	7496001	OR GASKET D7.6 X 2.62 VITON
13	5493001	GASKET D8 X 4 EPT 70SH
14	5283001	TAP BODY 3/8"G X M13 OT
15	5221801	NUT M13 H4 OT
16	7496037	OR GASKET D6 X 2 VITON
17	5163017CM	STEAM HOSE CHROMED
18	5494001	GASKET D8.5 X 5 X 3.2 PTFE
19	5226602	STEAM HOSE TERMINAL CHROMED
20	5163018CM	COMPLETE WATER HOSE CHROMED
24	5966503	ASSEMBLY COMPLETE STEAM HOSE
25	5974002.01	ASSEMBLY WATER TAP
26	5225226CM	STRAIGHT FITTING M22 X 1 H25 OT CHROMED
27	5493003	GASKET D20.5X15 H1.5 NBR 70SH
28	5226601TW	WATER HOSE TERMINAL D23.5 H16 OT CHROMED
29	5966504	ASSEMBLY WATER HOSE
30	5371801	KNOB D32
31	7371001	INSULATING
32	5283039	TAP BODY 3/8"G X 3/8"G X M13 OT
33	5960505	ASSEMBLY ADJUSTMENT ROD
34	5974029.01	COMPLETE STEAM TAP
35	5974030.01	ASSEMBLY WATER TAP
36	7496072	OR GASKET 121
37	5471532	SPRING
38	5220606TP	COMPLETE CUP
39	7496073	OR GASKET 115
40	5221872CM	NUT
41	5163151CM	STEAM HOSE CHROMED
42	5494001	GASKET D8.5 X 5 X 3.2 PTFE
43	5226612CM	TERMINAL 3 HOLES
44	5966537	ASSEMBLY COMPLETE STEAM HOSE 3 HOLES
45	5225607TW	WATER HOSE CHROMED
46	7496003	OR GASKET 108 VITON
47	5226610TW	WATER TERMINAL HOSE
48	5966531	ASSEMBLY WATER HOSE

TABLE 5
Mod. R PM - S PM

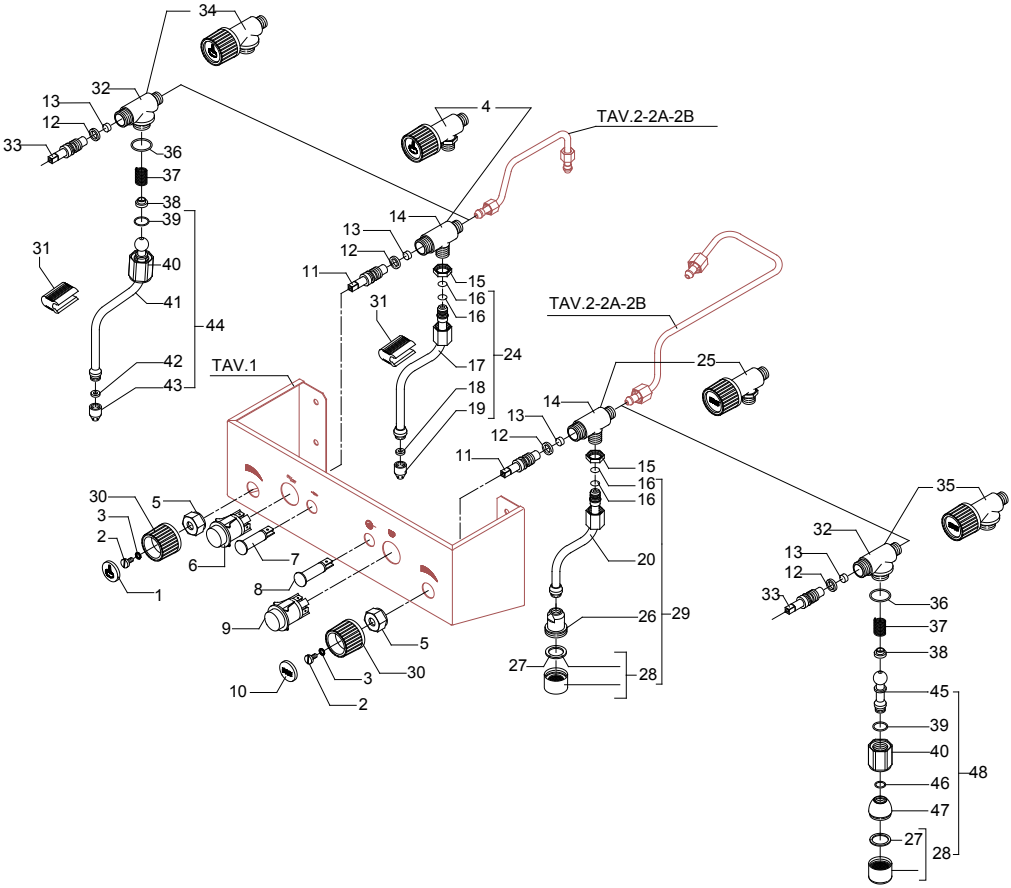

TABLE 5A Mod. R DE

POS	CODE	DESCRIPTION
1	5373901	STEAM PLUG D21
2	7816205	SCREW TCI M4X10 UNI 6107 OT
3	7814001	WASHER Ø 4
4	5974001.01	COMPLETE STEAM TAP
5	5221802CM	NUT 3/8"G H11.5 OT CHROMED
6	7633303	ROUND YELLOW SWITCH
7	7633609	ORANGE LAMP 110/240V
8	7633610	GREEN LAMP 110/240V
10	5373902	WATER PLUG
11	5960505	ASSEMBLY ADJUSTMENT ROD
12	7496001	OR GASKET D7.6 X 2.62 VITON
13	5493001	GASKET D8 X 4 EPT 70SH
14	5283001	TAP BODY 3/8"G X M13 OT
15	5221801	NUT M13 H4 OT
16	7496037	OR GASKET D6 X 2 VITON
17	5163017CM	STEAM HOSE CHROMED
18	5494001	GASKET D8.5 X 5 X 3.2 PTFE
19	5226602	STEAM HOSE TERMINAL CHROMED
20	5163018CM	COMPLETE WATER HOSE CHROMED
24	5966503	ASSEMBLY COMPLETE STEAM HOSE
25	5974002.01	ASSEMBLY WATER TAP
26	5225226CM	STRAIGHT FITTING M22 X 1 H25 OT CHROMED
27	5493003	GASKET D20.5X15 H1.5 NBR 70SH
28	5226601TW	WATER HOSE TERMINAL D23.5 H16 OT CHROMED
29	5966504	ASSEMBLY WATER HOSE
30	5371801	KNOB D32
31	7371001	INSULATING
32	5283039	TAP BODY 3/8"G X 3/8"G X M13 OT
33	5960505	ASSEMBLY ADJUSTMENT ROD
34	5974029.01	COMPLETE STEAM TAP
35	5974030.01	ASSEMBLY WATER TAP
36	7496072	OR GASKET 121
37	5471532	SPRING
38	5220606TP	COMPLETE CUP
39	7496073	OR GASKET 115
40	5221872CM	NUT
41	5163151CM	STEAM HOSE CHROMED
42	5494001	GASKET D8.5 X 5 X 3.2 PTFE
43	5226612CM	TERMINAL 3 HOLES
44	5966537	ASSEMBLY COMPLETE STEAM HOSE 3 HOLES
45	5225607TW	WATER HOSE CHROMED
46	7496003	OR GASKET 108 VITON
47	5226610TW	WATER TERMINAL HOSE
48	5966531	ASSEMBLY WATER HOSE

TABLE 5A
Mod. R DE

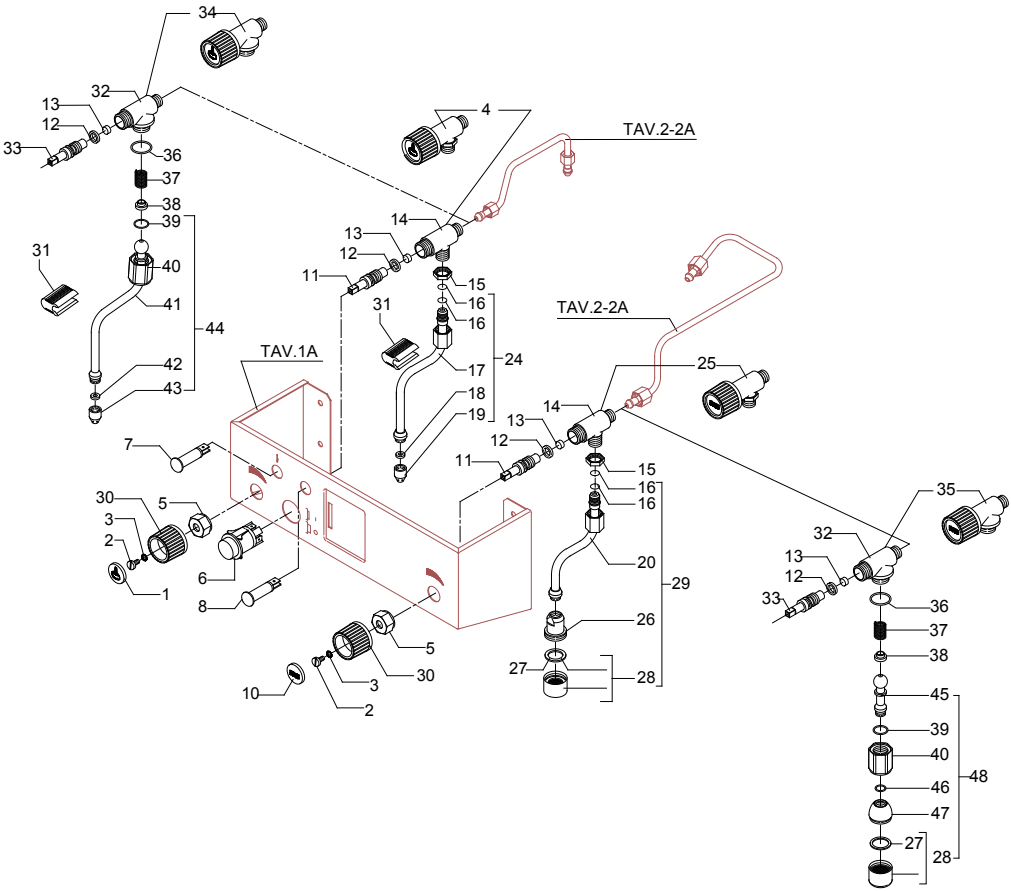

TABLE 6 Mod. R DE MG - R PM MG

POS	CODE	DESCRIPTION
1	5223003	JET M6 X 6 HOLE D0.8 OT
2	5225233	FITTING M12 ES.14 H22 HOLE M6 OT
3	5302015	STRAIGHT FITTING 1/8"G OT
4	5224002	STUD D8.5 X 17.5 OT
5	7496035	OR GASKET D4.2 X 1.9 VITON
6	7304502LL	STRAIGHT FITTING 1/8"G WITH COUNTERSINK
7	5965020	ASSEMBLY COMPLETE CHECK VALVE
8	7304507TR	UNION ELBOW 1/8"G MF OT
9	5221844	NUT 1/8"G H3
11	7701111	SOLENOID VALVE 2 WAY 115V PARKER (from 12/06)
11	7702310	SOLENOID VALVE 2 WAY 230V PARKER (from 07/06)
11	7702409	SOLENOID VALVE 2 WAY 240V PARKER (from 04/07)
12	7630327	SOLENOID VALVE COIL 110V PARKER
12	7630328	SOLENOID VALVE COIL 220/230V PARKER
12	7630329	SOLENOID VALVE COIL 240V PARKER
13	5973055	ASSEMBLY BANJO UNION
14	5302032	STRAIGHT FITTING 1/8"G X 3/8"NPT ES.22 H27 OT
15	7611508	PUMP CLAMP
16	7472401	PUMP JOINT
17	7374005	PROCON PUMP FILTER
18	7496048	OR GASKET FOR PUMP FILTER PROCON
19	7730506	PUMP 100 L/H PA104X 1-2GR
20	5194511LL	HOSE D6 PTFE
21	7304502TR	STRAIGHT FITTING 1/8"G OT
22	7816417	SCREW TE M6X16 UNI 5739 A2
23	5302057	FITTING 1/8" X 3/8"G OT
24	7805004	PLAIN WASHER D6 UNI 6592 FEZN
25	7821403	NUT M6 UNI 5587 OT
26	7741001	ELECTRIC MOTOR 100V
26	7741102	ELECTRIC MOTOR 110V 18MF
26	7742206	ELECTRIC MOTOR 220/240V 10MF
27	7200504	FLEXIBLE HOSE 3/8" L=1500 AISI 304

TABLE 6
Mod. R DE MG - R PM MG

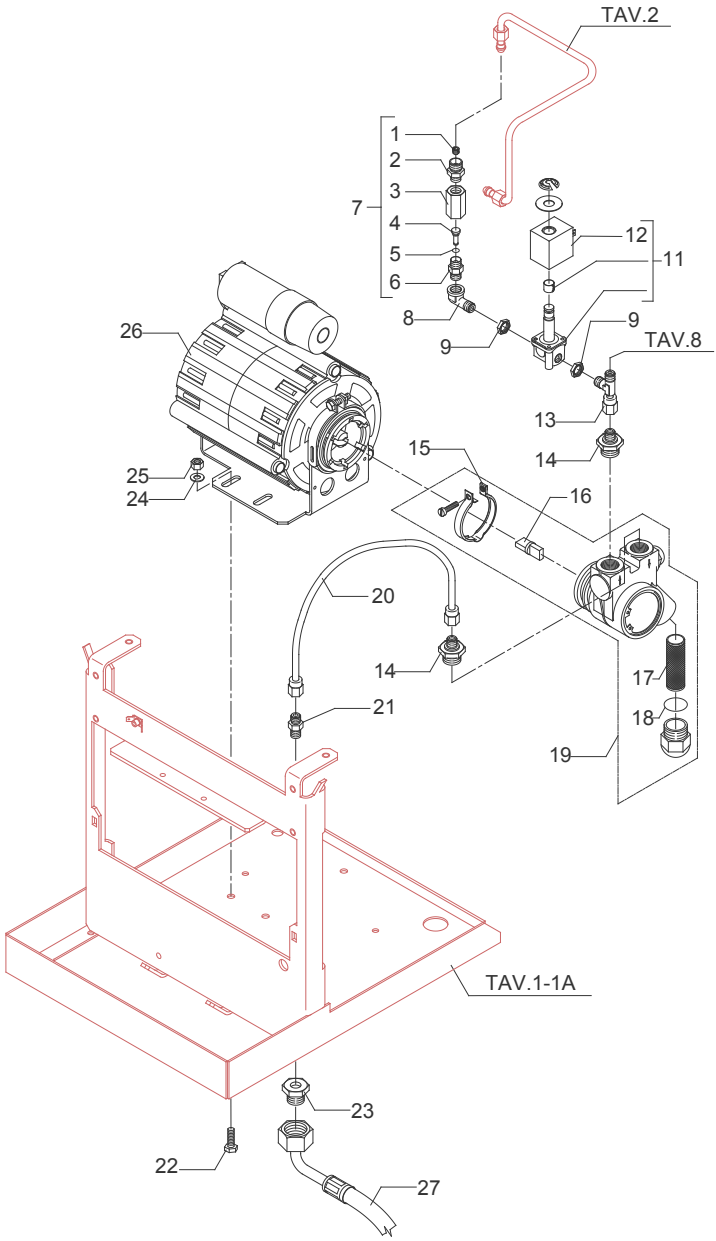

TABLE 6B (up to 25.01.06) Mod. R DE - R PM

POS	CODE	DESCRIPTION
2	5302004	STRAIGHT FITTING 1/8"G X M12 OT
3	5302015	STRAIGHT FITTING 1/8"G OT
4	5224002	STUD D8.5 X 17.5 OT
5	7496035	OR GASKET D4.2 X 1.9 VITON
6	7304502LL	STRAIGHT FITTING 1/8"G WITH COUNTERSINK
7	5965020	ASSEMBLY COMPLETE CHECK VALVE
8	7304507TR	UNION ELBOW 1/8"G MF OT
9	5221844	NUT 1/8"G H3
11	7701111	SOLENOID VALVE 2 WAY 115V PARKER (from 12/06)
11	7702310	SOLENOID VALVE 2 WAY 230V PARKER (from 07/06)
11	7702409	SOLENOID VALVE 2 WAY 240V PARKER (from 04/07)
12	7630327	SOLENOID VALVE COIL 110V PARKER
12	7630328	SOLENOID VALVE COIL 220/230V PARKER
12	7630329	SOLENOID VALVE COIL 240V PARKER
13	7303001TR	UNION ELBOW 1/8"G
14	5973050	ASSEMBLY FITTING FOR PUMP
16	7814002	NOTCHED WASHER D5 DIN 6798A A2
17	5966007	VIBRATION PUMP 100V
17	5966004	VIBRATION PUMP 110V
17	5966005	VIBRATION PUMP 220/230V
17	5966006	VIBRATION PUMP 240V
21	7304502TR	STRAIGHT FITTING 1/8"G OT
22	7303009	BY-PASS FITTING
23	5302057	FITTING 1/8" X 3/8"G OT
27	7470602	VIBRATION-DAMPING
28	5194521.01LL	BY-PASS HOSE D6 PTFE
29	7631507	CONNECTOR WITH DIODE AND CABLE L=550MM
30	7634805	THERMIC SAFETY DEVICE 250V 100°C AUTOMATIC
30	7634806	THERMIC SAFETY DEVICE 250V 100°C MANUAL
30	7634802	THERMIC SAFETY DEVICE 250V 80°C MANUAL
32	5221844	NUT 1/8"G H3
33	7304505	FITTING 3 WAY 1/8" X 1/8" X 1/8"G OT
34	5344005	ASSEMBLY PUMP FIXING PLATE
35	7200501	FLEXIBLE HOSE 1/8"G L=240MM
36	5973053	ASSEMBLY BANJO UNION
37	7817801	SCREW TPS M4 X 16
38	7492004	GASKET D8.5 X 4.2 X 1.5
39	5162109LL	SOLENOID VALVE- SURPRESSION VALVE HOSE
40	7304509TR	FITTING
41	5194511LL	HOSE D6 PTFE
42	7200504	FLEXIBLE HOSE 3/8" L=1500 AISI 304

TABLE 6B (up to 25.01.06)
Mod. R DE - R PM

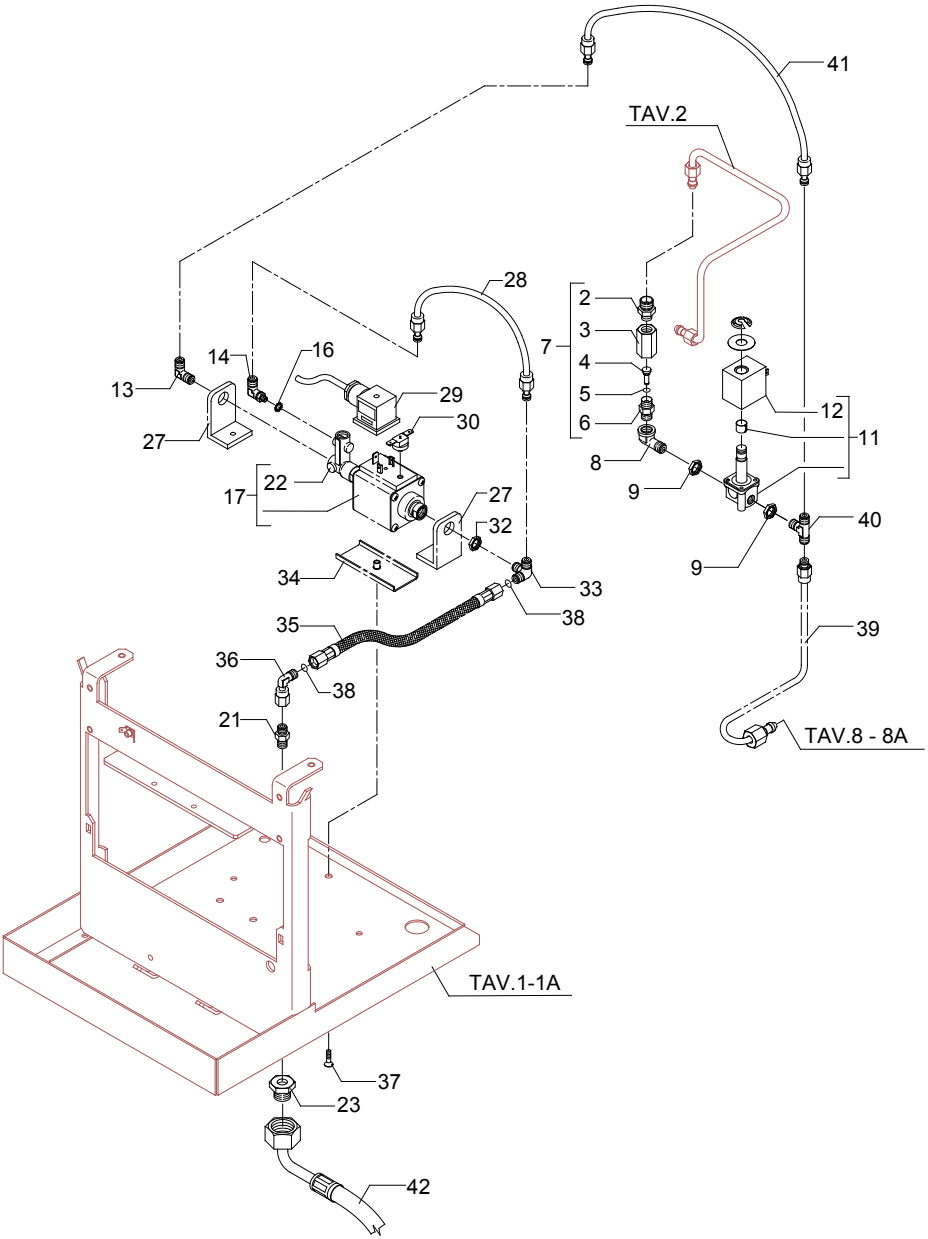

TABLE 6B (from 26.01.06) Mod. R DE - R PM

POS	CODE	DESCRIPTION
2	5302004	STRAIGHT FITTING 1/8"G X M12 OT
3	5302015	STRAIGHT FITTING 1/8"G OT
4	5224002	STUD D8.5 X 17.5 OT
5	7496035	OR GASKET D4.2 X 1.9 VITON
6	7304502LL	STRAIGHT FITTING 1/8"G WITH COUNTERSINK
7	5965020	ASSEMBLY COMPLETE CHECK VALVE
8	7304507TR	UNION ELBOW 1/8"G MF OT
9	5221844	NUT 1/8"G H3
11	7701111	SOLENOID VALVE 2 WAY 115V PARKER (from 12/06)
11	7702310	SOLENOID VALVE 2 WAY 230V PARKER (from 07/06)
11	7702409	SOLENOID VALVE 2 WAY 240V PARKER (from 04/07)
12	7630327	SOLENOID VALVE COIL 110V PARKER
12	7630328	SOLENOID VALVE COIL 220/230V PARKER
12	7630329	SOLENOID VALVE COIL 240V PARKER
13	7303001TR	UNION ELBOW 1/8"G
17	7731017	VIBRATION PUMP 100V 50/60Hz
17	7731011	VIBRATION PUMP EX5 120V
17	7731009	VIBRATION PUMP EX5 230V
17	7731014	VIBRATION PUMP EX5 240V
21	7304502TR	STRAIGHT FITTING 1/8"G OT
23	5302057	FITTING 1/8" X 3/8"G OT
27	7470602	VIBRATION-DAMPING
33	5225278	PUMP FITTING
34	5344005	ASSEMBLY PUMP FIXING PLATE
35	7200501	FLEXIBLE HOSE 1/8"G L=240MM
36	5973053	ASSEMBLY BANJO UNION
37	7817801	SCREW TPS M4 X 16
38	7492004	GASKET D8.5 X 4.2 X 1.5
39	5162109LL	SOLENOID VALVE- SURPRESSION VALVE HOSE
40	7304509TR	FITTING
41	5194511LL	HOSE D6 PTFE
42	7200504	FLEXIBLE HOSE 3/8" L=1500 AISI 304
43	7634816	THERMIC SAFETY DEVICE 100°C AUTOMATIC

TABLE 6B (from 26.01.06)
Mod. R DE - R PM

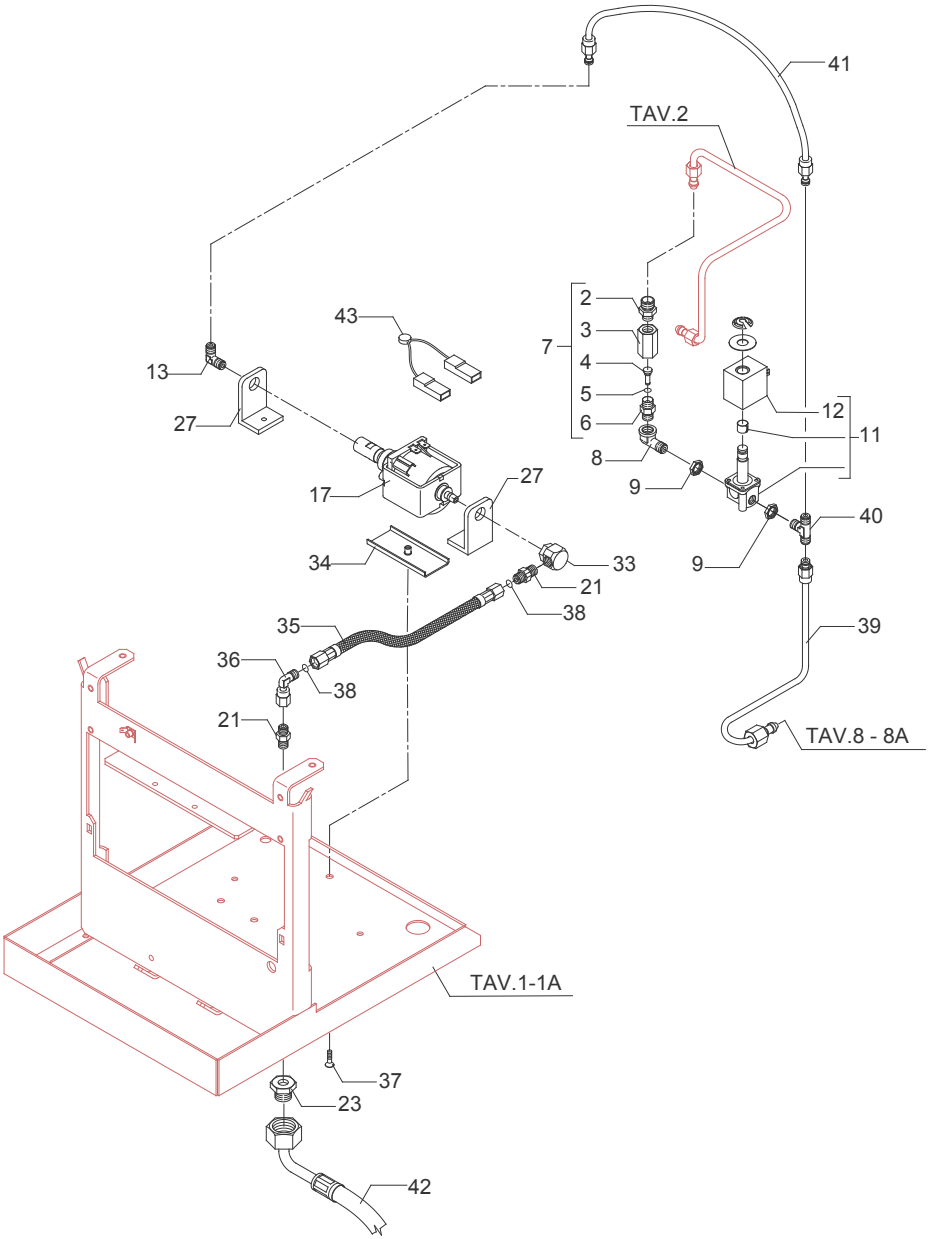

TABLE 6C (up to 30.11.06) Mod. S PM

POS	CODE	DESCRIPTION
1	5973050	ASSEMBLY FITTING FOR PUMP
2	7814002	NOTCHED WASHER D5 DIN 6798A A2
3	7303001TR	UNION ELBOW 1/8"G
4	5194521.01LL	BY-PASS HOSE D6 PTFE
5	7632402	DIODE
6	7631507	CONNECTOR WITH DIODE AND CABLE L=550MM
7	7634806	THERMIC SAFETY DEVICE 250V 100°C MANUAL
9	7303009	BY-PASS FITTING
10	5966007	VIBRATION PUMP 100V
10	5966004	VIBRATION PUMP 110V
10	5966005	VIBRATION PUMP 220/230V
10	5966006	VIBRATION PUMP 240V
11	5221844	NUT 1/8"G H3
12	7304505	FITTING 3 WAY 1/8" X 1/8"G OT
13	7806002	SCREW TCEI M4 X 12 UNI 5931 8.8 ZN
14	7805009	PLAIN WASHER D5 X 11 X 1
15	5471510	PUMP SUPPORT SHAPED SPRING AISI 302
16	5493023	TAP GASKET EPT 70SH
17	5194553.01LL	PUMP-SOLENOID VALVE HOSE D6

TABLE 6C (up to 30.11.06)
Mod. S PM

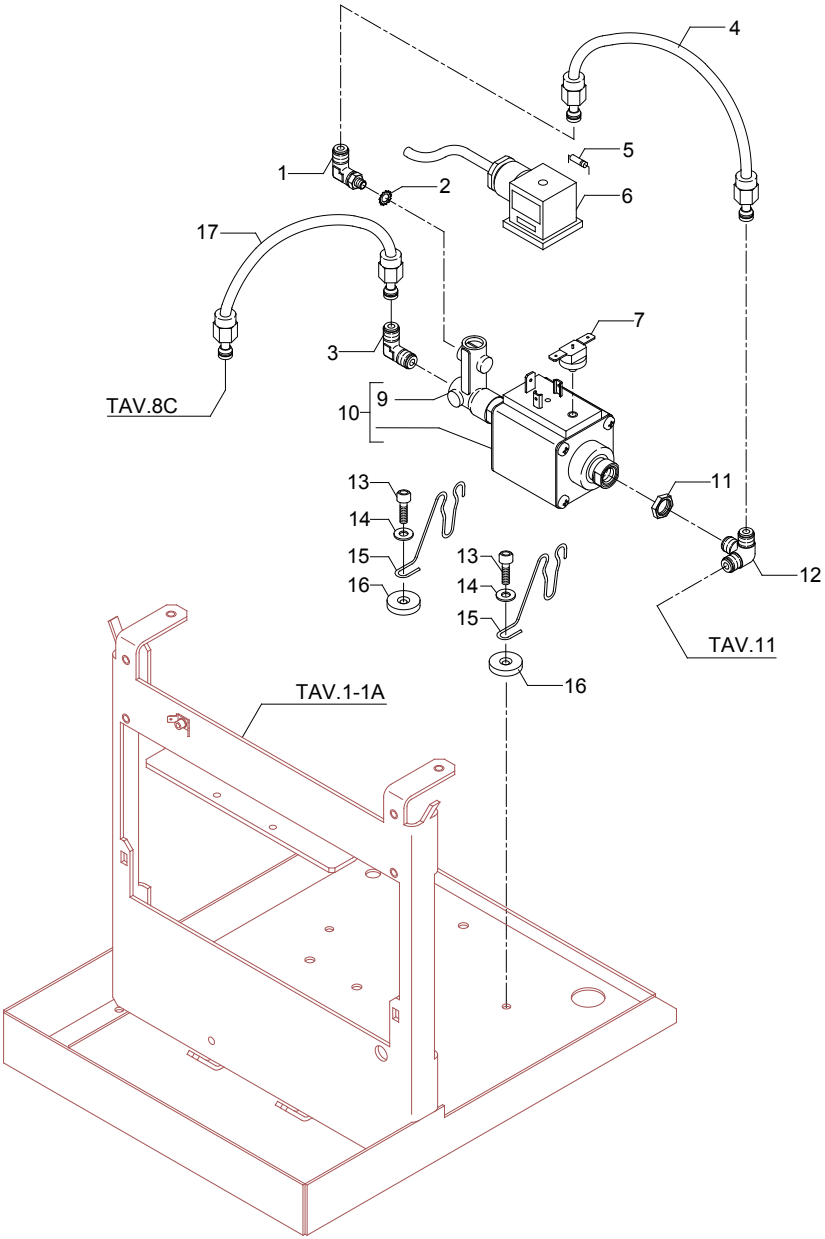

TABLE 6C (from 01.12.06) Mod. S PM

POS	CODE	DESCRIPTION
1	7303001TR	UNION ELBOW 1/8"G
2	7303006	RUBBER-HOLDER FITTING
3	7731017	VIBRATION PUMP 100V 50/60Hz
3	7731011	VIBRATION PUMP EX5 120V
3	7731009	VIBRATION PUMP EX5 230V
3	7731014	VIBRATION PUMP EX5 240V
4	7806002	SCREW TCEI M4 X 12 UNI 5931 8.8 ZN
5	7805009	PLAIN WASHER D5 X 11 X 1
6	5471534	PUMP SUPPORT SHAPED SPRING AISI 302
7	5493023	TAP GASKET EPT 70SH
8	7499904LL	ADHESIVE SPONGE 55X55X20
9	5194553.01LL	PUMP-SOLENOID VALVE HOSE
10	7634816	THERMIC SAFETY DEVICE 100°C AUTOMATIC

TABLE 6C (from 01.12.06)
Mod. S PM

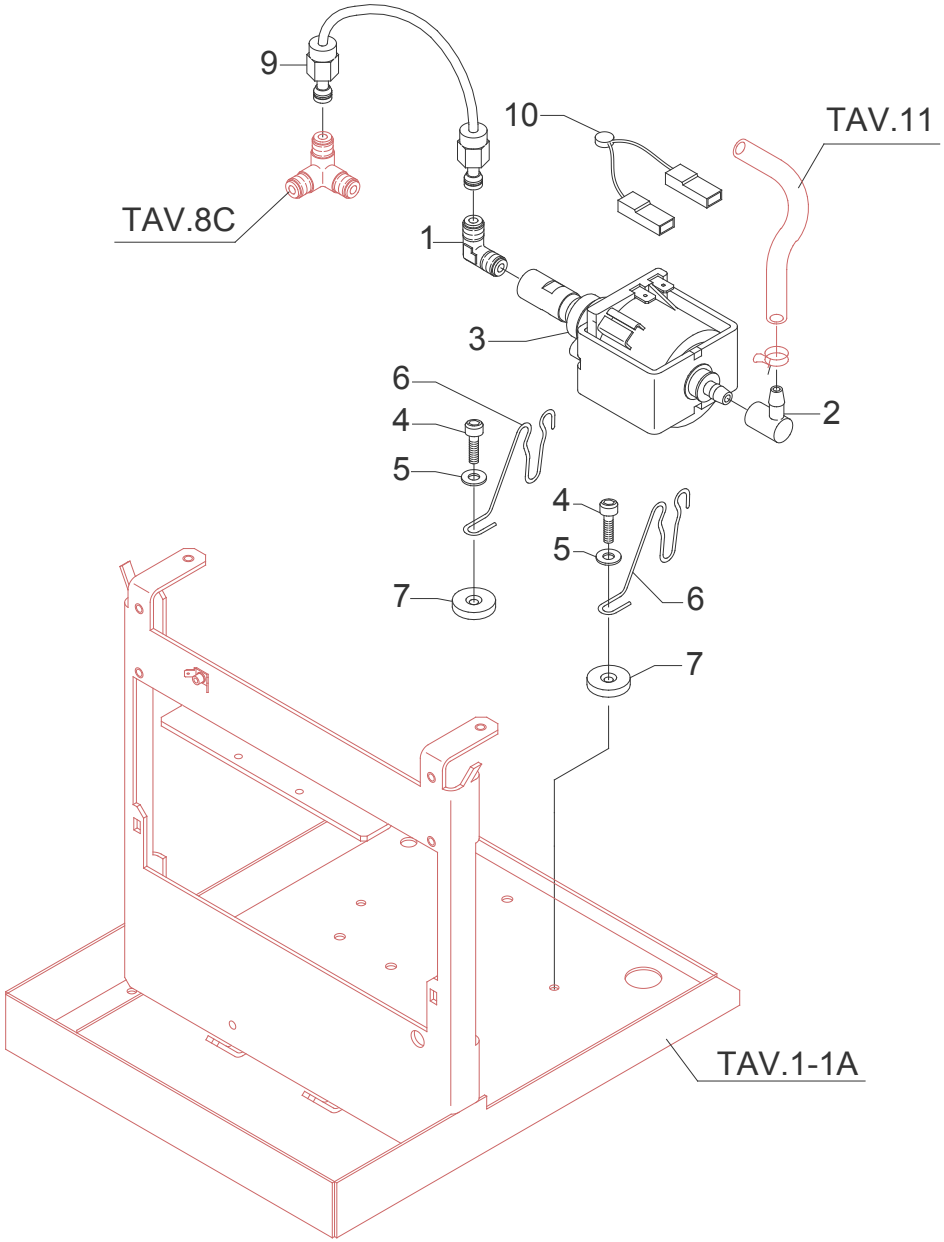

TABLE 7 (up to 11.05.09) Mod. R DE - R PM

POS	CODE	DESCRIPTION
1	5973055	ASSEMBLY BANJO UNION
2	5301504TR	UNION ELBOW 1/8"G X M12
3	5223013	JET M5 X 5 HOLE D1 OT
4	7303001LL	UNION ELBOW 1/8"G
5	7701112	SOLENOID VALVE 3 WAY 115V PARKER
5	7702311	SOLENOID VALVE 3 WAY 230V PARKER
5	7702410	SOLENOID VALVE 3 WAY 240V PARKER
6	7630332	SOLENOID VALVE COIL 115V PARKER
6	7630331	SOLENOID VALVE COIL 230V PARKER
6	7630330	SOLENOID VALVE COIL 240V PARKER
7	5221835	CAP NUT 1/8"G ES.14 H12 OT
8	5492019	GASKET D8 X 2 ASBESTOS FREE
9	5283018	DRAIN FITTING FOR SURPRESSION VALVE 1/8"G OT CHROMED
10	5194558LL	SOLENOID VALVE DRAIN HOSE
11	5221844	NUT 1/8"G H3
12	5162040LL	BOILER DRAIN HOSE
13	5302019	FITTING M13 X ES.15 H25.5 OT
14	7451501	BALL COCK FF 1/4"G
15	7304506	FITTING 1/4" X 1/8"G OT
16	7703014	SOLENOID VALVE WITHOUT COIL PARKER

TABLE 7 (up to 11.05.09)
Mod. R DE - R PM

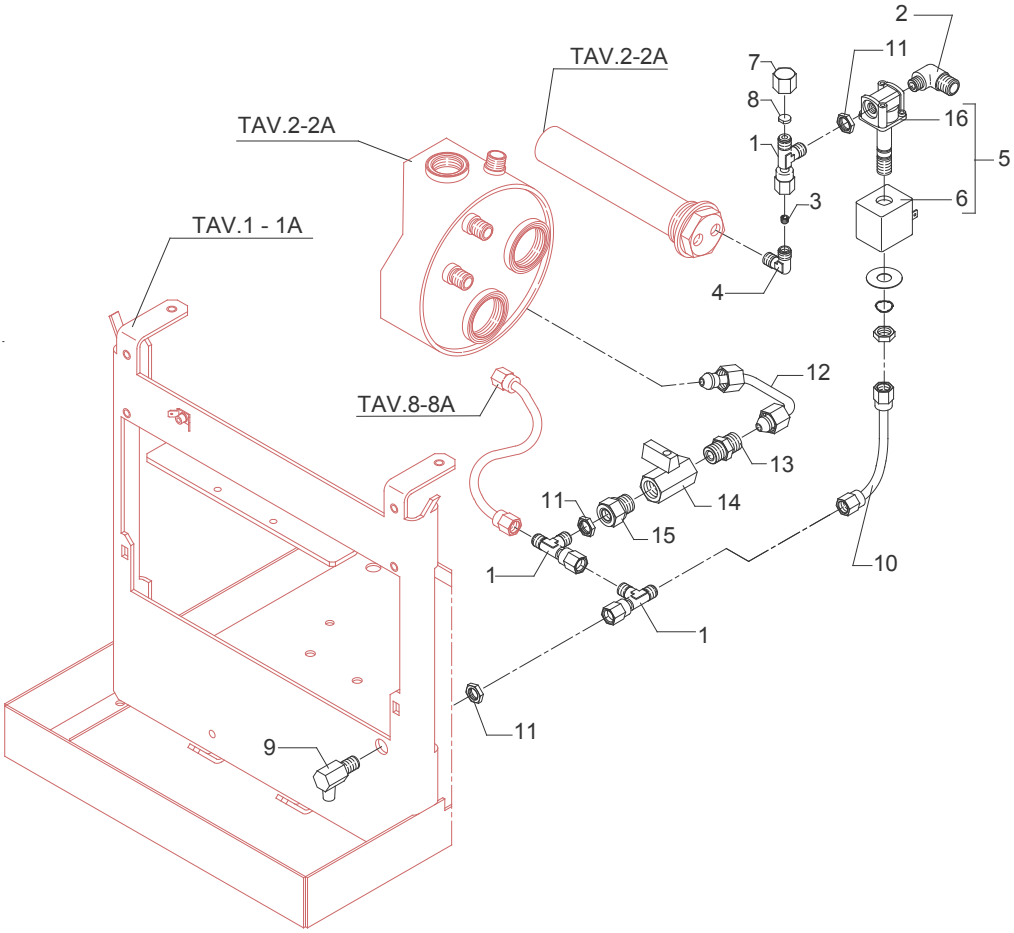

TABLE 7 (up to 01.04.13) Mod. R DE - R PM

POS	CODE	DESCRIPTION
1	5973055	ASSEMBLY BANJO UNION
2	5301504TR	UNION ELBOW 1/8"G X M12
3	5223013	JET M5 X 5 HOLE D1 OT
4	7303001LL	UNION ELBOW 1/8"G
5	7701117	SOLENOID VALVE 3 WAY 115V ODE
5	7702316	SOLENOID VALVE 3 WAY 230V ODE
5	7702411	SOLENOID VALVE 3 WAY 240V ODE
7	5221835	CAP NUT 1/8"G ES.14 H12 OT
8	5492019	GASKET D8 X 2 ASBESTOS FREE
9	5283018	DRAIN FITTING FOR SURPRESSION VALVE 1/8"G OT CHROMED
10	5194558LL	SOLENOID VALVE DRAIN HOSE
11	5221844	NUT 1/8"G H3
12	5162040LL	BOILER DRAIN HOSE
13	5302019	FITTING M13 X ES.15 H25.5 OT
14	7451501	BALL COCK FF 1/4"G
15	7304506	FITTING 1/4" X 1/8"G OT

TABLE 7 (up to 01.04.13)
Mod. R DE - R PM

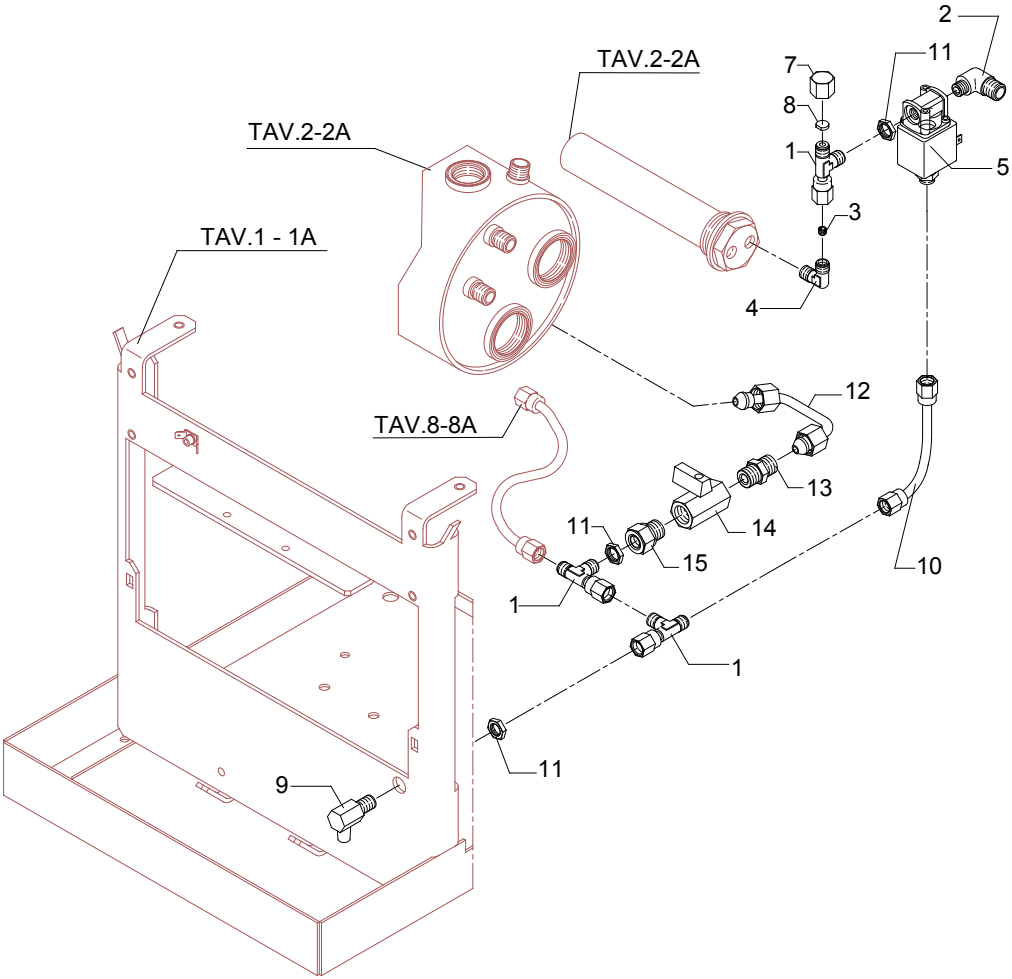

TABLE 7 (from 02.04.13) Mod. R DE - R PM

POS	CODE	DESCRIPTION
1	5973055	ASSEMBLY BANJO UNION
2	5301504TR	UNION ELBOW 1/8"G X M12
3	5223013	JET M5 X 5 HOLE D1 OT
4	7303001LL	UNION ELBOW 1/8"G
5	7701112	SOLENOID VALVE 3 WAY 115V PARKER
5	7702311	SOLENOID VALVE 3 WAY 230V PARKER
5	7702410	SOLENOID VALVE 3 WAY 240V PARKER
6	7630332	SOLENOID VALVE COIL 115V PARKER
6	7630331	SOLENOID VALVE COIL 230V PARKER
6	7630330	SOLENOID VALVE COIL 240V PARKER
7	5221835	CAP NUT 1/8"G ES.14 H12 OT
8	5492019	GASKET D8 X 2 ASBESTOS FREE
9	5283018	DRAIN FITTING FOR SURPRESSION VALVE 1/8"G OT CHROMED
10	5194558LL	SOLENOID VALVE DRAIN HOSE
11	5221844	NUT 1/8"G H3
12	5162040LL	BOILER DRAIN HOSE
13	5302019	FITTING M13 X ES.15 H25.5 OT
14	7451501	BALL COCK FF 1/4"G
15	7304506	FITTING 1/4" X 1/8"G OT
16	7703014	SOLENOID VALVE WITHOUT COIL PARKER

TABLE 7 (from 02.04.13)
Mod. R DE - R PM

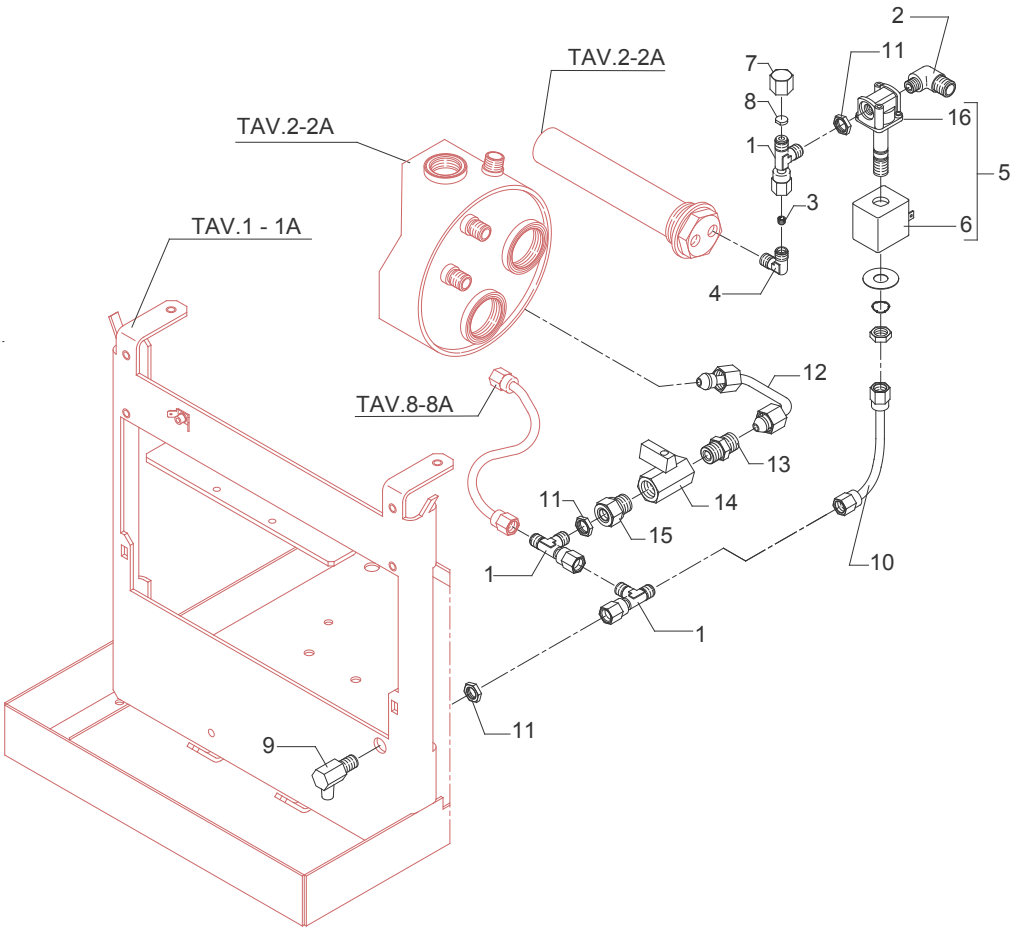

TABLE 7A (up to 10.05.09) Mod. S PM

POS	CODE	DESCRIPTION
1	5973055	ASSEMBLY BANJO UNION
2	5301504TR	UNION ELBOW 1/8"G X M12
3	5223013	JET M5 X 5 HOLE D1 OT
4	7303001LL	UNION ELBOW 1/8"G
5	7701112	SOLENOID VALVE 3 WAY 115V PARKER
5	7702311	SOLENOID VALVE 3 WAY 230V PARKER
5	7702410	SOLENOID VALVE 3 WAY 240V PARKER
6	7630332	SOLENOID VALVE COIL 115V PARKER
6	7630331	SOLENOID VALVE COIL 230V PARKER
6	7630330	SOLENOID VALVE COIL 240V PARKER
7	5221835	CAP NUT 1/8"G ES.14 H12 OT
8	5492019	GASKET D8 X 2 ASBESTOS FREE
9	5283018	DRAIN FITTING FOR SURPRESSION VALVE 1/8"G OT CHROMED
10	5194558LL	SOLENOID VALVE DRAIN HOSE
11	5221844	NUT 1/8"G H3
12	5162040LL	BOILER DRAIN HOSE
13	5302019	FITTING M13 X ES.15 H25.5 OT
14	7451501	BALL COCK FF 1/4"G
15	7304506	FITTING 1/4" X 1/8"G OT
16	5973053	ASSEMBLY BANJO UNION
17	7703014	SOLENOID VALVE WITHOUT COIL PARKER

TABLE 7A (up to 10.05.09)
Mod. S PM

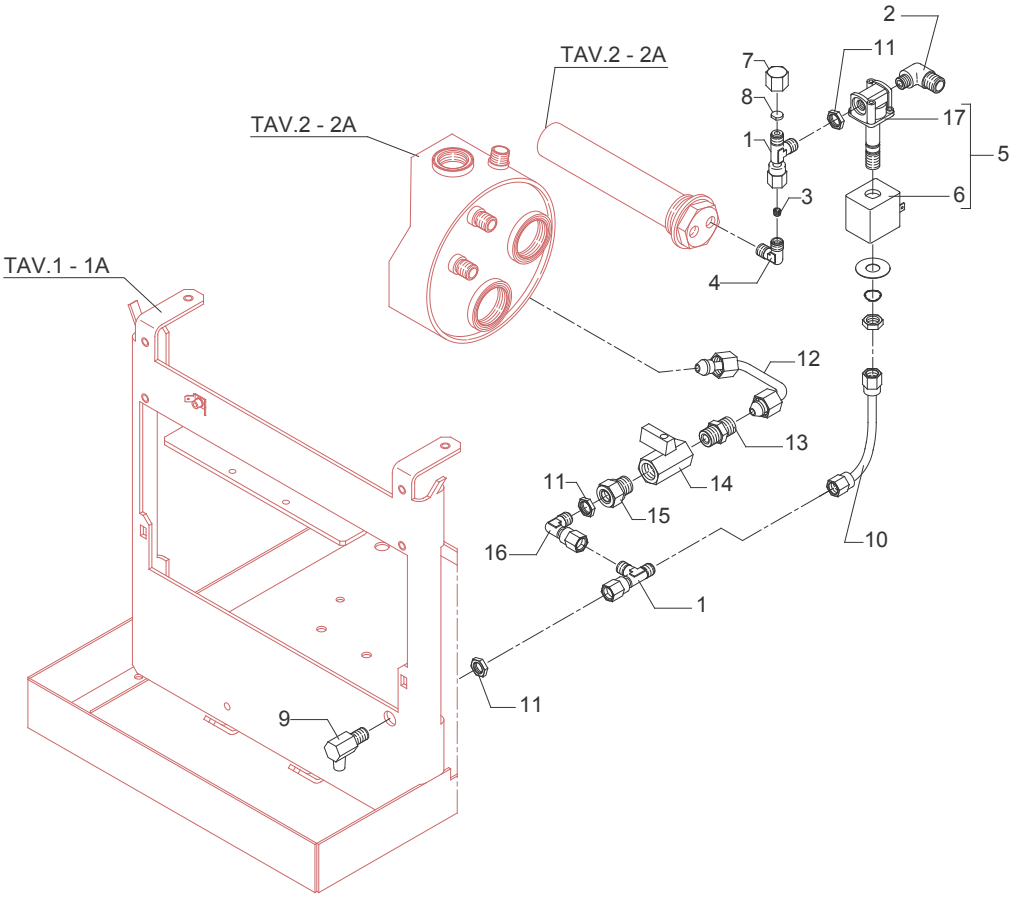

TABLE 7A (up to 01.04.13) Mod. S PM

POS	CODE	DESCRIPTION
1	5973055	ASSEMBLY BANJO UNION
2	5301504TR	UNION ELBOW 1/8"G X M12
3	5223013	JET M5 X 5 HOLE D1 OT
4	7303001LL	UNION ELBOW 1/8"G
5	7701117	SOLENOID VALVE 3 WAY 115V ODE
5	7702316	SOLENOID VALVE 3 WAY 230V ODE
5	7702411	SOLENOID VALVE 3 WAY 240V ODE
7	5221835	CAP NUT 1/8"G ES.14 H12 OT
8	5492019	GASKET D8 X 2 ASBESTOS FREE
9	5283018	DRAIN FITTING FOR SURPRESSION VALVE 1/8"G OT CHROMED
10	5194558LL	SOLENOID VALVE DRAIN HOSE
11	5221844	NUT 1/8"G H3
12	5162040LL	BOILER DRAIN HOSE
13	5302019	FITTING M13 X ES.15 H25.5 OT
14	7451501	BALL COCK FF 1/4"G
15	7304506	FITTING 1/4" X 1/8"G OT
16	5973053	ASSEMBLY BANJO UNION

TABLE 7A (up to 01.04.13)
Mod. S PM

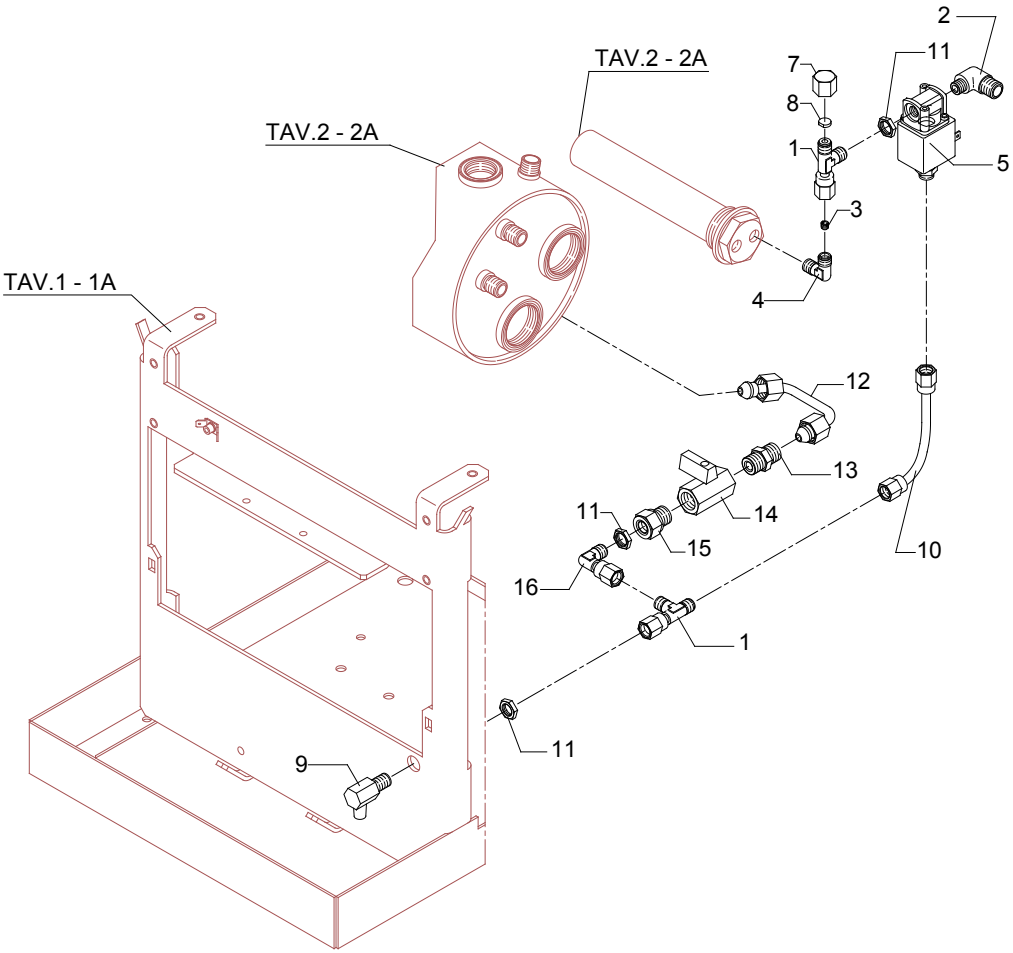

TABLE 7A (from 02.04.13) Mod. S PM

POS	CODE	DESCRIPTION
1	5973055	ASSEMBLY BANJO UNION
2	5301504TR	UNION ELBOW 1/8"G X M12
3	5223013	JET M5 X 5 HOLE D1 OT
4	7303001LL	UNION ELBOW 1/8"G
5	7701112	SOLENOID VALVE 3 WAY 115V PARKER
5	7702311	SOLENOID VALVE 3 WAY 230V PARKER
5	7702410	SOLENOID VALVE 3 WAY 240V PARKER
6	7630332	SOLENOID VALVE COIL 115V PARKER
6	7630331	SOLENOID VALVE COIL 230V PARKER
6	7630330	SOLENOID VALVE COIL 240V PARKER
7	5221835	CAP NUT 1/8"G ES.14 H12 OT
8	5492019	GASKET D8 X 2 ASBESTOS FREE
9	5283018	DRAIN FITTING FOR SURPRESSION VALVE 1/8"G OT CHROMED
10	5194558LL	SOLENOID VALVE DRAIN HOSE
11	5221844	NUT 1/8"G H3
12	5162040LL	BOILER DRAIN HOSE
13	5302019	FITTING M13 X ES.15 H25.5 OT
14	7451501	BALL COCK FF 1/4"G
15	7304506	FITTING 1/4" X 1/8"G OT
16	5973053	ASSEMBLY BANJO UNION
17	7703014	SOLENOID VALVE WITHOUT COIL PARKER

TABLE 7A (from 02.04.13)
Mod. S PM

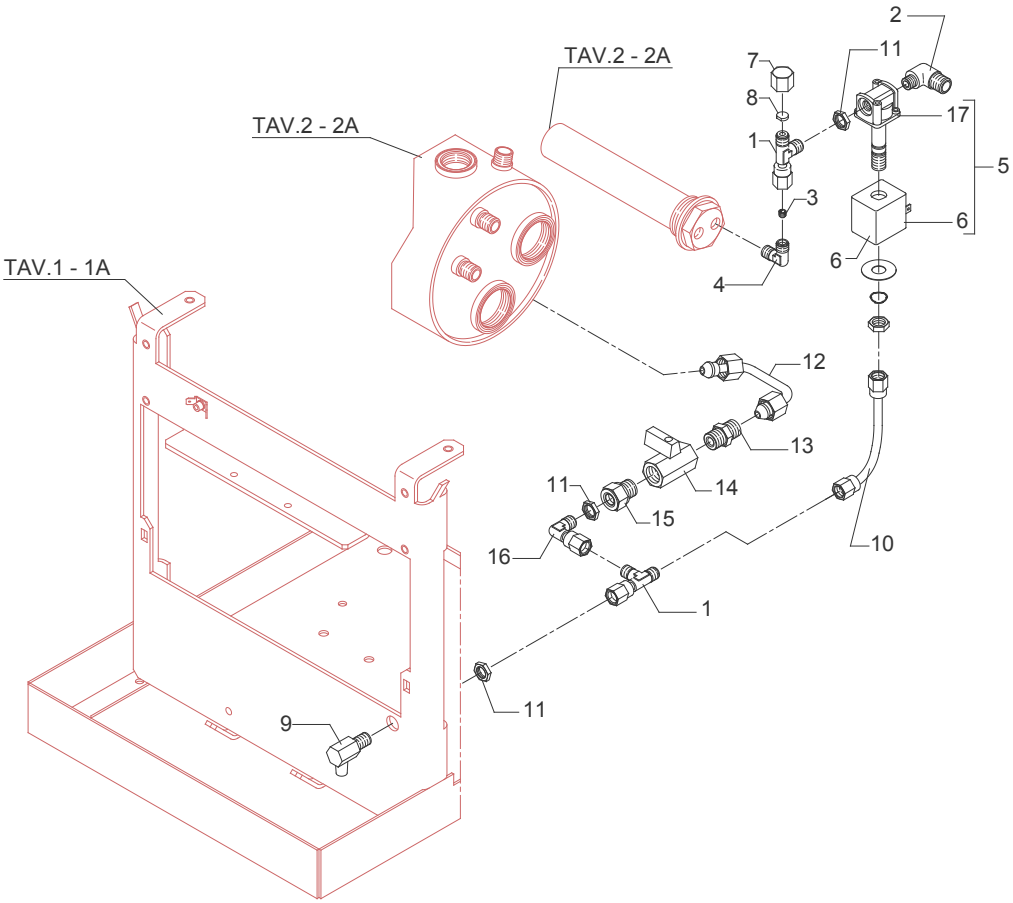

TABLE 8 (up to 31.01.10) Mod. R PM MG

POS	CODE	DESCRIPTION
1	5162041LL	COMPLETE SURPRESSION VALVE HOSE
2	5302028	STRAIGHT FITTING 1/4"G ES.16 H29.5 OT
3	5471505	CALIBRATED SPRING D0.45 H22 AISI 302
4	5224615TP	GASKET-HOLDER
5	5493001	GASKET D8 X 4 EPT 70SH
6	5283040	SURPRESSION VALVE BODY
7	5302016	STRAIGHT FITTING 1/8"G X M12 H29 OT
8	5471506.01	CALIBRATED SPRING D1.1 H32 AISI 302
9	5222201	SPACER D16X12.2 H6.7 OT
10	5224609	GASKET-HOLDER D5.3
11	5965025.01	ASSEMBLY COMPLETE SURPRESSION VALVE
12	5194508LL	COMPLETE SURPRESSION VALVE HOSE
13	5162042LL	COMPLETE SURPRESSION VALVE HOSE
14	7496018	OR GASKET 105 VITON

TABLE 8 (up to 31.01.10)
Mod. R PM MG

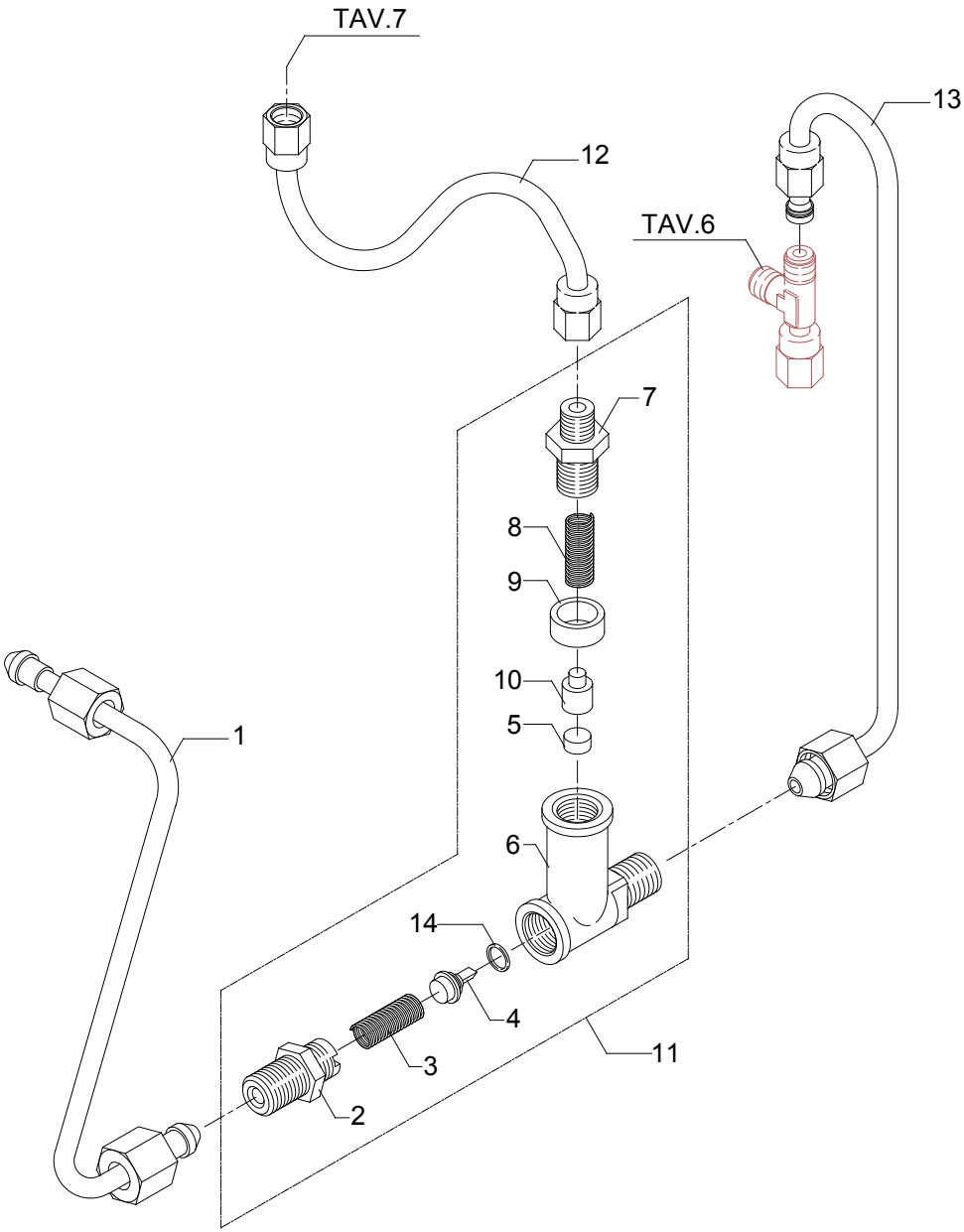

TABLE 8 (from 01.02.10) Mod. R PM MG

POS	CODE	DESCRIPTION
1	5162041LL	COMPLETE SURPRESSION VALVE HOSE
2	5302028	STRAIGHT FITTING 1/4"G ES.16 H29.5 OT
3	5471505	CALIBRATED SPRING D0.45 H22 AISI 302
4	5224615TP	GASKET-HOLDER
5	5493001	GASKET D8 X 4 EPT 70SH
6	5283048	SURPRESSION VALVE BODY
7	5302072	RUBBER-HOLDER FITTING
8	5471506.01	CALIBRATED SPRING D1.1 H32 AISI 302
9	7496052	OR GASKET 114 VITON
10	5224619	GASKET-HOLDER
11	5965166	ASSEMBLY COMPLETE SURPRESSION VALVE 12BAR
12	5194508.01LL	COMPLETE SURPRESSION VALVE HOSE
13	5162042LL	COMPLETE SURPRESSION VALVE HOSE
14	7496018	OR GASKET 105 VITON

TABLE 8 (from 01.02.10)
Mod. R PM MG

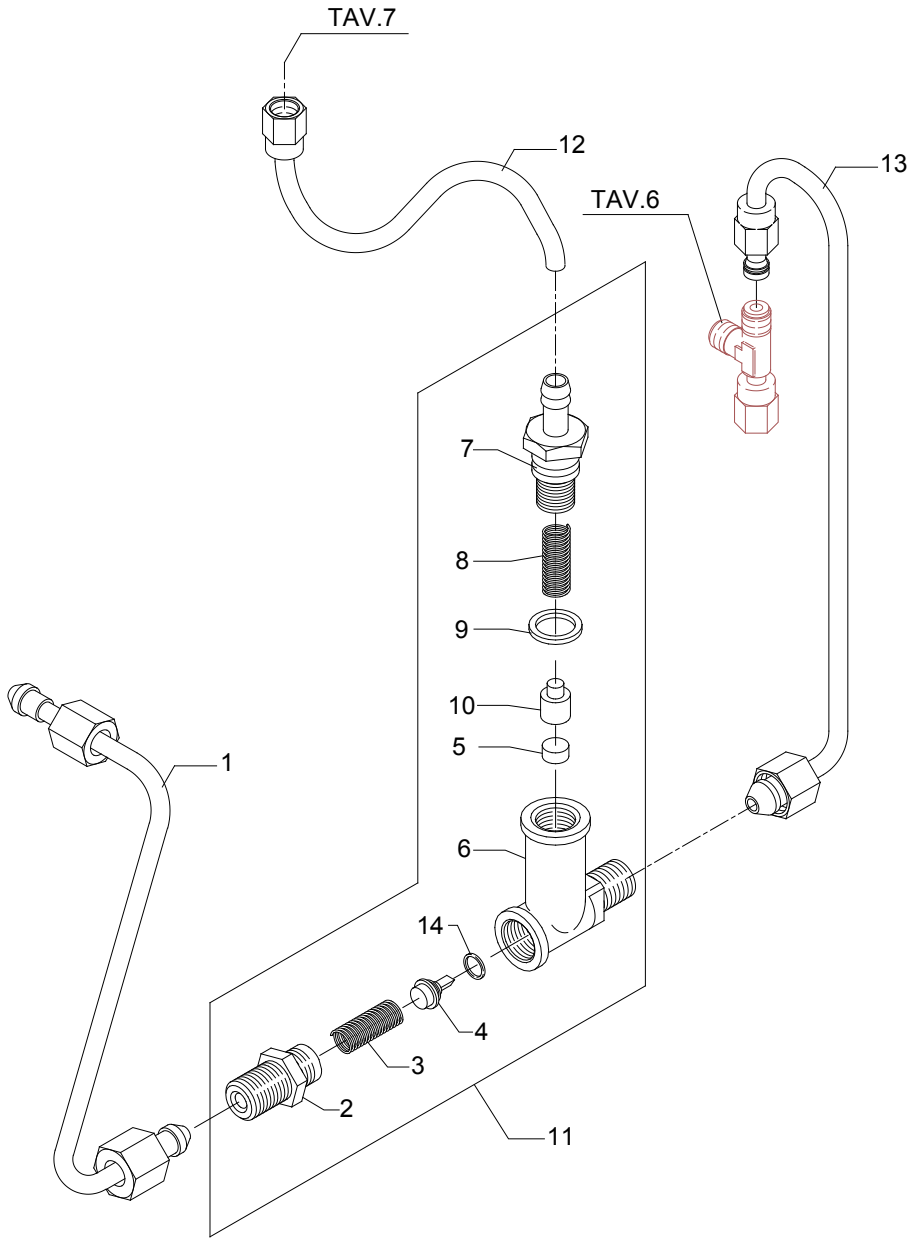

TABLE 8A (up to 31.01.10) Mod. R DE

POS	CODE	DESCRIPTION
1	5162110LL	COMPLETE SURPRESSION VALVE HOSE
2	5302028	STRAIGHT FITTING 1/4"G ES.16 H29.5 OT
3	5471505	CALIBRATED SPRING D0.45 H22 AISI 302
4	5224615TP	GASKET-HOLDER
5	5493001	GASKET D8 X 4 EPT 70SH
6	5283040	SURPRESSION VALVE BODY
7	5302016	STRAIGHT FITTING 1/8"G X M12 H29 OT
8	5471506.01	CALIBRATED SPRING D1.1 H32 AISI 302
9	5222201	SPACER D16X12.2 H6.7 OT
10	5224609	GASKET-HOLDER D5.3
11	5965025.01	ASSEMBLY COMPLETE SURPRESSION VALVE
12	5194508LL	COMPLETE SURPRESSION VALVE HOSE
14	5221821	NUT 1/4"G H5 OT
15	5302009	STRAIGHT FITTING M12 X 1/4"G H24 OT
16	5191501	SPACER D11X8X6.5 PTFE
17	5471001	NET FILTER D11 AISI 304
18	7431001	FLOW METER + AUT. WITH LED
19	7496020	OR GASKET 2112 VITON
20	7496018	OR GASKET 105 VITON

TABLE 8A (up to 31.01.10)
Mod. R DE

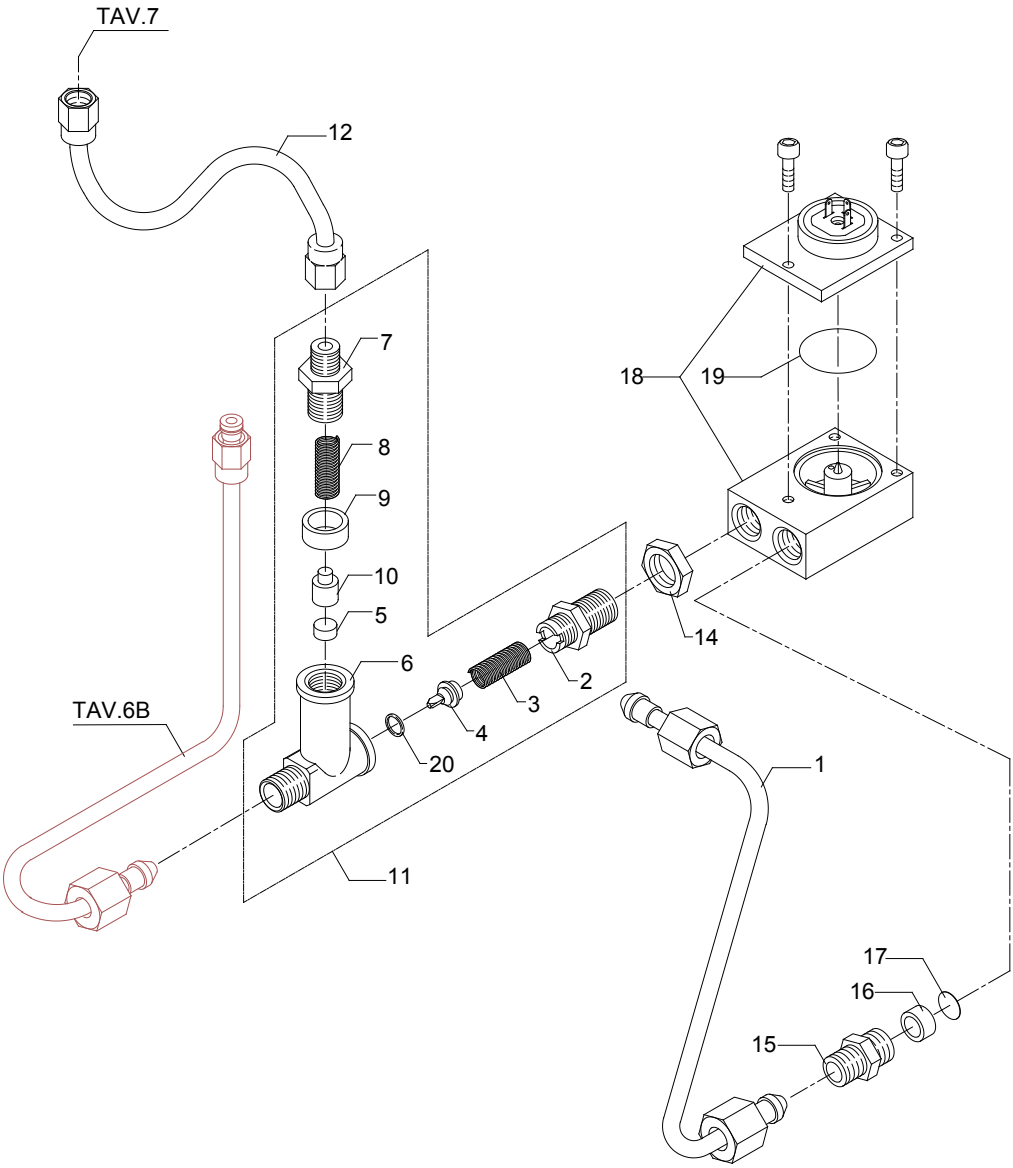

TABLE 8A (from 01.02.10) Mod. R DE

POS	CODE	DESCRIPTION
1	5162110LL	COMPLETE SURPRESSION VALVE HOSE
2	5302028	STRAIGHT FITTING 1/4"G ES.16 H29.5 OT
3	5471505	CALIBRATED SPRING D0.45 H22 AISI 302
4	5224615TP	GASKET-HOLDER
5	5493001	GASKET D8 X 4 EPT 70SH
6	5283048	SURPRESSION VALVE BODY
7	5302072	RUBBER-HOLDER FITTING
8	5471506.01	CALIBRATED SPRING D1.1 H32 AISI 302
9	7496052	OR GASKET 114 VITON
10	5224619	GASKET-HOLDER
11	5965166	ASSEMBLY COMPLETE SURPRESSION VALVE 12BAR
12	5194508.01LL	COMPLETE SURPRESSION VALVE HOSE
14	5221821	NUT 1/4"G H5 OT
15	5302009	STRAIGHT FITTING M12 X 1/4"G H24 OT
16	5191501	SPACER D11X8X6.5 PTFE
17	5471001	NET FILTER D11 AISI 304
18	7431001	FLOW METER + AUT. WITH LED
19	7496020	OR GASKET 2112 VITON
20	7496018	OR GASKET 105 VITON

TABLE 8A (from 01.02.10)
Mod. R DE

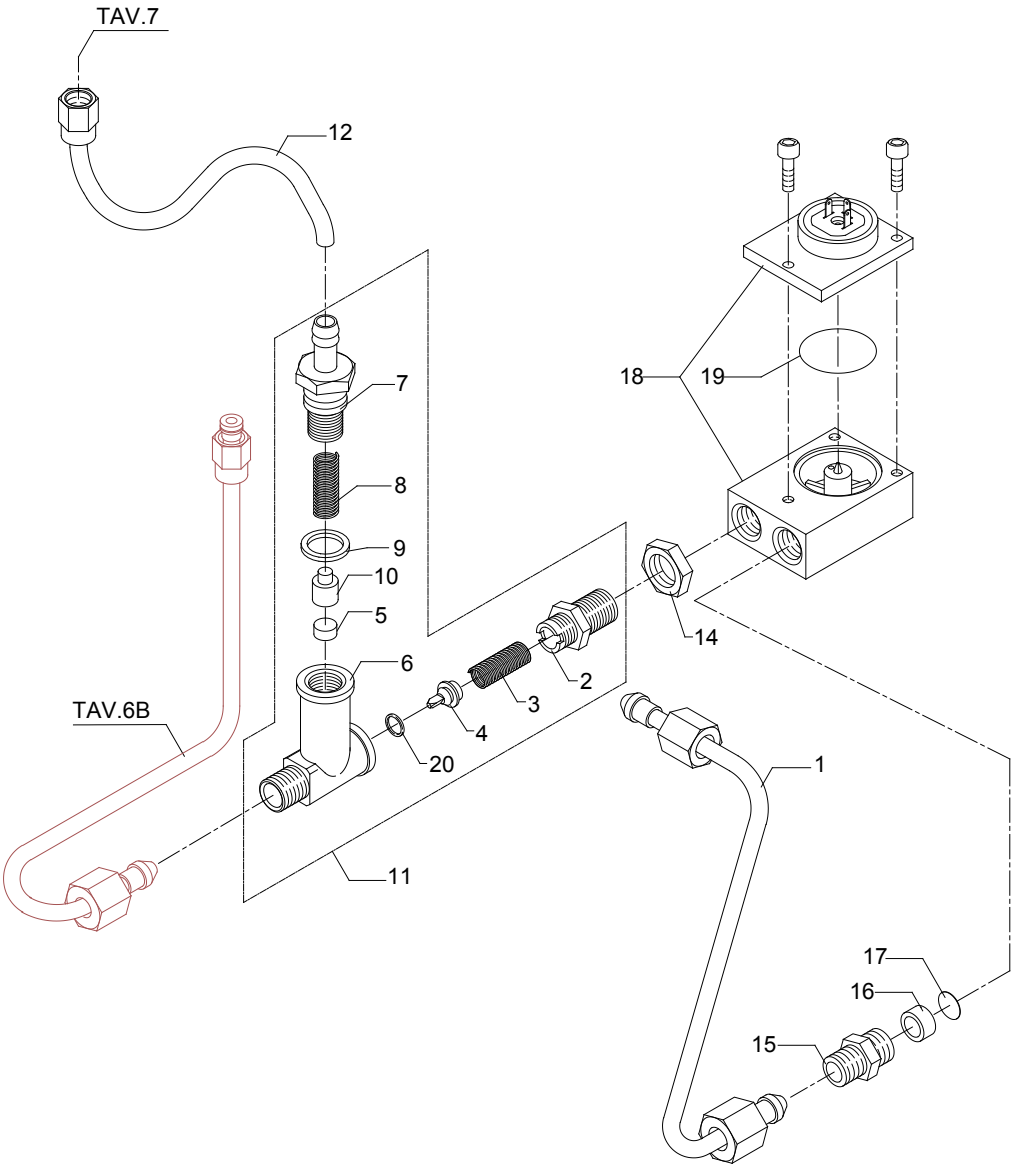

TABLE 8B (up to 31.01.10) Mod. R DE MG

POS	CODE	DESCRIPTION
1	5162041LL	COMPLETE SURPRESSION VALVE HOSE
2	5302028	STRAIGHT FITTING 1/4"G ES.16 H29.5 OT
3	5471505	CALIBRATED SPRING D0.45 H22 AISI 302
4	5224615TP	GASKET-HOLDER
5	5493001	GASKET D8 X 4 EPT 70SH
6	5283040	SURPRESSION VALVE BODY
7	5302016	STRAIGHT FITTING 1/8"G X M12 H29 OT
8	5471506.01	CALIBRATED SPRING D1.1 H32 AISI 302
9	5222201	SPACER D16X12.2 H6.7 OT
10	5224609	GASKET-HOLDER D5.3
11	5965025.01	ASSEMBLY COMPLETE SURPRESSION VALVE
12	5194508LL	COMPLETE SURPRESSION VALVE HOSE
13	5162111LL	SOLENOID VALVE- SURPRESSION VALVE HOSE
14	5221821	NUT 1/4"G H5 OT
15	5302009	STRAIGHT FITTING M12 X 1/4"G H24 OT
16	5191501	SPACER D11X8X6.5 PTFE
17	5471001	NET FILTER D11 AISI 304
18	7431001	FLOW METER + AUT. WITH LED
19	7496020	OR GASKET 2112 VITON
20	7496018	OR GASKET 105 VITON

TABLE 8B (up to 31.01.10)
Mod. R DE MG

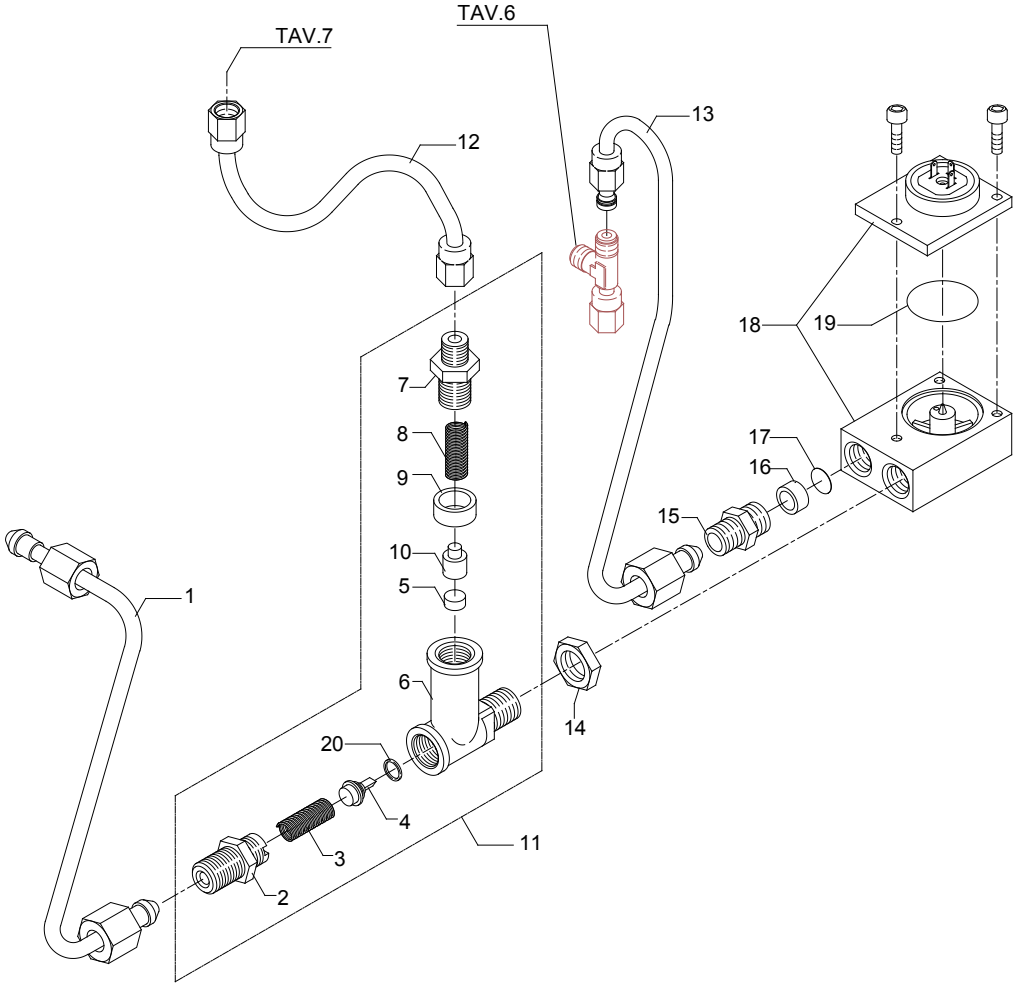

TABLE 8B (from 01.02.10) Mod. R DE MG

POS	CODE	DESCRIPTION
1	5162041LL	COMPLETE SURPRESSION VALVE HOSE
2	5302028	STRAIGHT FITTING 1/4"G ES.16 H29.5 OT
3	5471505	CALIBRATED SPRING D0.45 H22 AISI 302
4	5224615TP	GASKET-HOLDER
5	5493001	GASKET D8 X 4 EPT 70SH
6	5283048	SURPRESSION VALVE BODY
7	5302072	RUBBER-HOLDER FITTING
8	5471506.01	CALIBRATED SPRING D1.1 H32 AISI 302
9	7496052	OR GASKET 114 VITON
10	5224619	GASKET-HOLDER
11	5965166	ASSEMBLY COMPLETE SURPRESSION VALVE 12BAR
12	5194508.01LL	COMPLETE SURPRESSION VALVE HOSE
13	5162111LL	SOLENOID VALVE- SURPRESSION VALVE HOSE
14	5221821	NUT 1/4"G H5 OT
15	5302009	STRAIGHT FITTING M12 X 1/4"G H24 OT
16	5191501	SPACER D11X8X6.5 PTFE
17	5471001	NET FILTER D11 AISI 304
18	7431001	FLOW METER + AUT. WITH LED
19	7496020	OR GASKET 2112 VITON
20	7496018	OR GASKET 105 VITON

TABLE 8B (from 01.02.10)
Mod. R DE MG

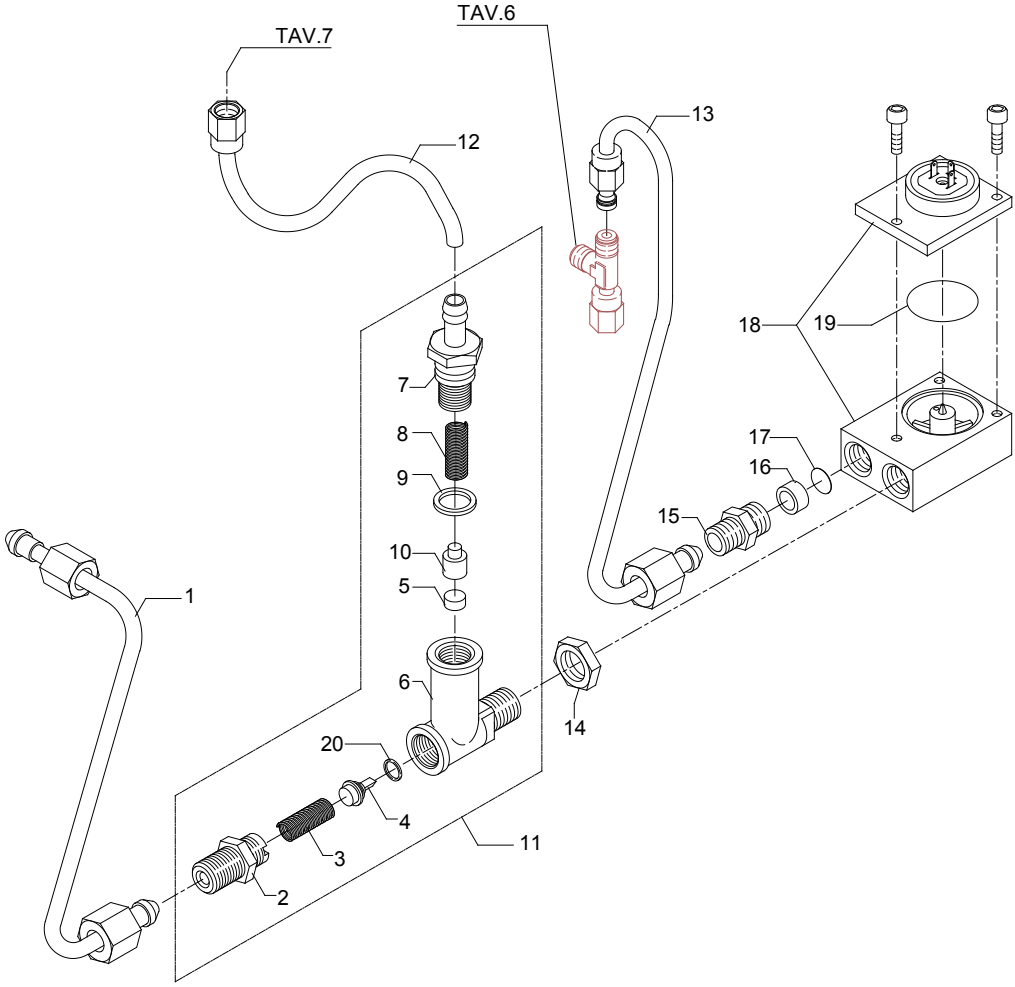

TABLE 8C (up to 31.01.10) Mod. S PM

POS	CODE	DESCRIPTION
1	5194542LL	DRAIN HOSE L=700MM SILICONE
6	5221844	NUT 1/8"G H3
8	7304505	FITTING 3 WAY 1/8"G OT
9	7630327	SOLENOID VALVE COIL 110V PARKER
9	7630328	SOLENOID VALVE COIL 220/230V PARKER
9	7630329	SOLENOID VALVE COIL 240V PARKER
10	7701111	SOLENOID VALVE 2 WAY 115V PARKER
10	7702310	SOLENOID VALVE 2 WAY 230V PARKER
10	7702409	SOLENOID VALVE 2 WAY 240V PARKER
12	5162245LL	BOILER LOAD HOSE
13	5301504TR	UNION ELBOW 1/8"G X M12
15	5223004	JET M6 X 6 HOLE D1
16	5302016	STRAIGHT FITTING 1/8"XM12
17	5471506.01	CALIBRATED SPRING D1.1 H32 AISI 302
18	5222201	SPACER D16X12.2 H6.7 OT
19	5224609	GASKET-HOLDER D5.3
20	5493001	GASKET D8X4 EPT 70SH
21	5283027R	SURPRESSION VALVE BODY BZ02/99 (R)
22	5224610	GASKET-HOLDER D6.2 OT
23	5471505	SPRING D0.45 H22 AISI302
24	5302017TP	STRAIGHT FITTING M12
25	5965036.01	ASSEMBLY SURPRESSION VALVE

TABLE 8C (up to 31.01.10)
Mod. S PM

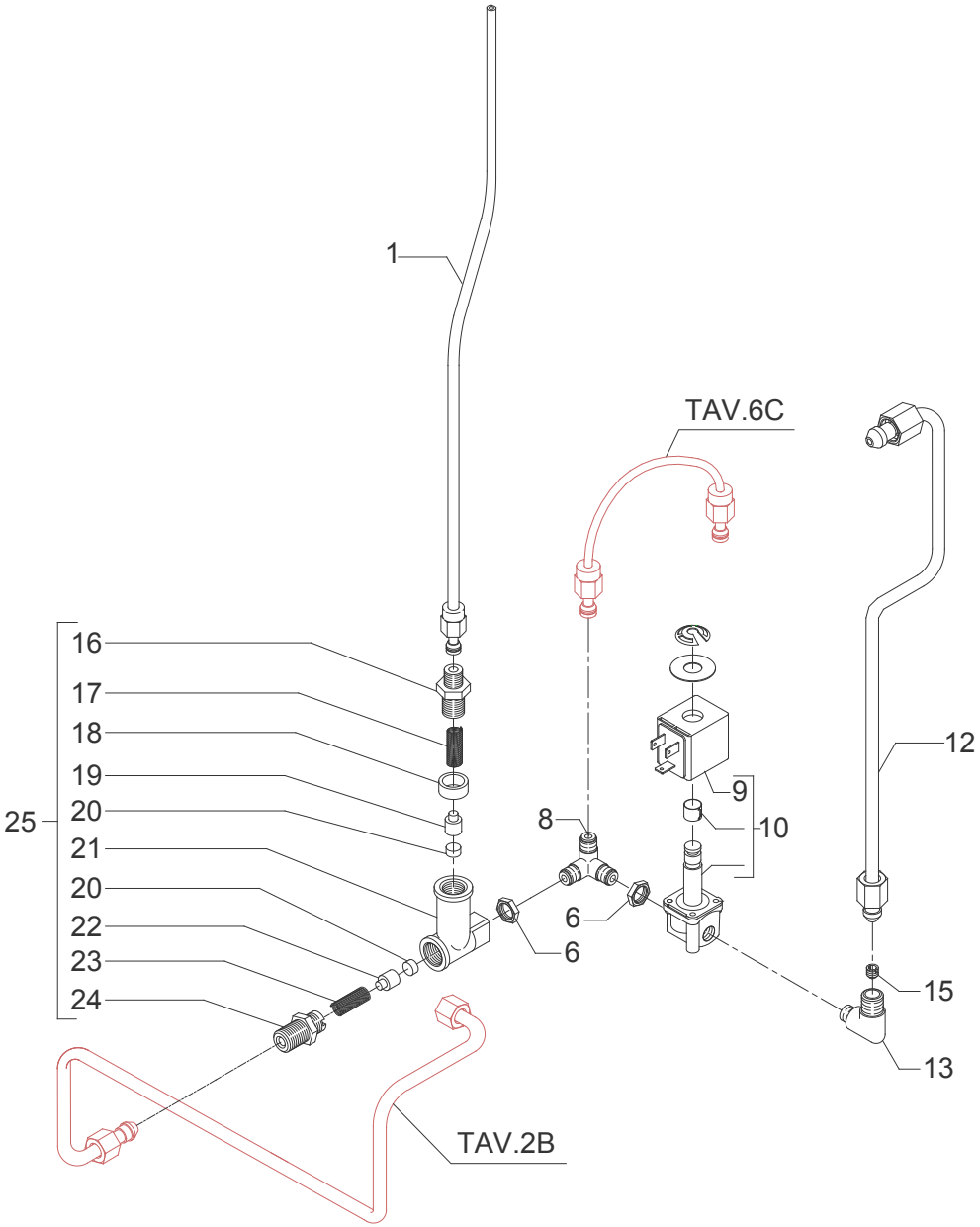

TABLE 8C (up to 18.03.13) Mod. S PM

POS	CODE	DESCRIPTION
1	5194542.01	DRAIN HOSE L=700MM SILICONE
6	5221844	NUT 1/8"G H3
8	7304505	FITTING 3 WAY 1/8"G OT
9	7630327	SOLENOID VALVE COIL 110V PARKER
9	7630328	SOLENOID VALVE COIL 220/230V PARKER
9	7630329	SOLENOID VALVE COIL 240V PARKER
10	7701111	SOLENOID VALVE 2 WAY 115V PARKER
10	7702310	SOLENOID VALVE 2 WAY 230V PARKER
10	7702409	SOLENOID VALVE 2 WAY 240V PARKER
12	5162245LL	BOILER LOAD HOSE
13	5301504TR	UNION ELBOW 1/8"G X M12
15	5223004	JET M6 X 6 HOLE D1
16	5302072	RUBBER-HOLDER FITTING
17	5471506.01	CALIBRATED SPRING D1.1 H32 AISI 302
18	7496052	OR GASKET 114 VITON
19	5224619	GASKET-HOLDER
20	5493001	GASKET D8 X 4 EPT 70SH
21	5283049	SURPRESSION VALVE BODY
22	5224615TP	GASKET-HOLDER
23	5471505	SPRING D0.45 H22 AISI302
24	5302017TP	STRAIGHT FITTING M12
25	5965165	ASSEMBLY SURPRESSION VALVE 12BAR
26	7496018	OR GASKET 105 VITON

TABLE 8C (up to 18.03.13)
Mod. S PM

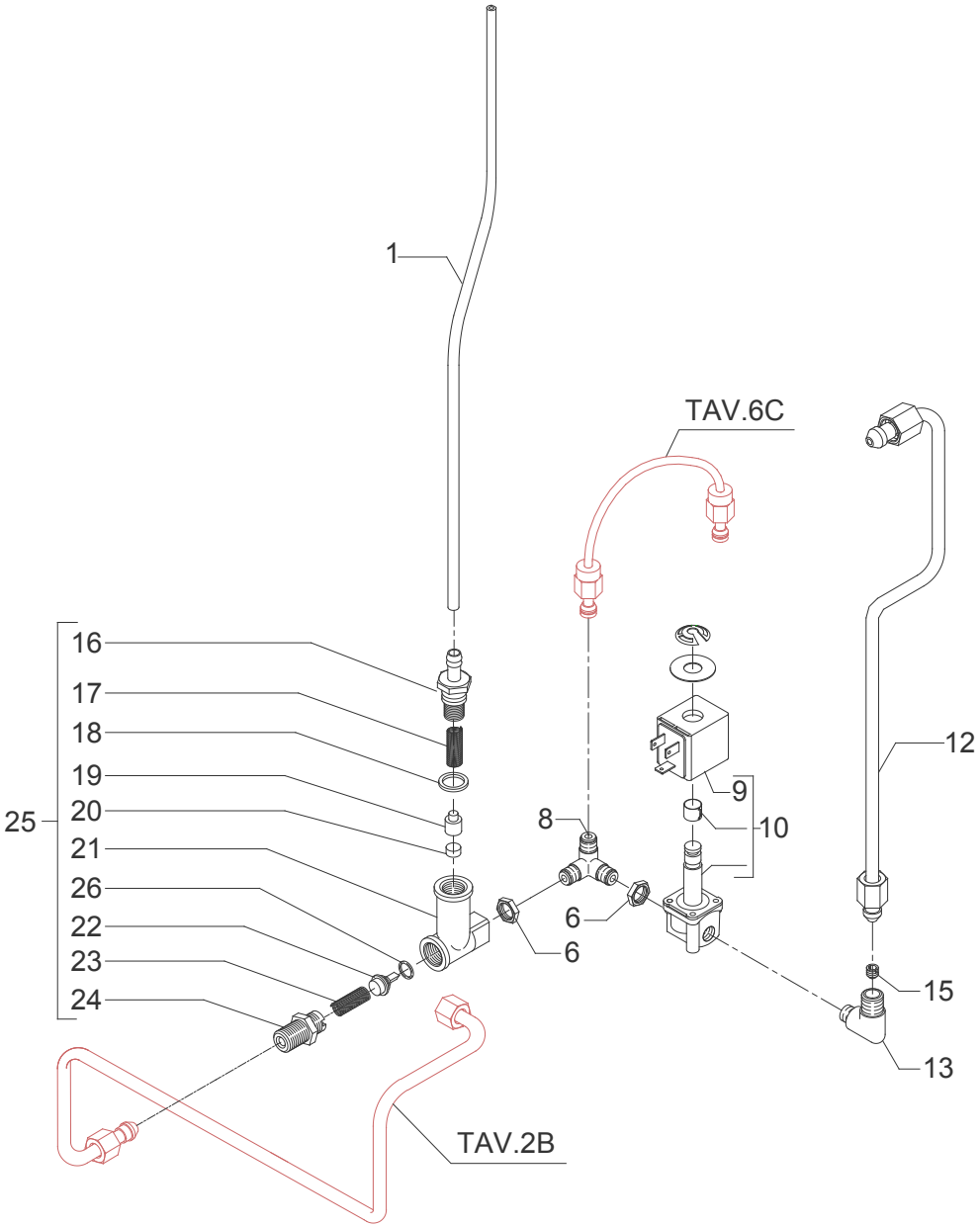

TABLE 8C (from 19.03.13) Mod. S PM

POS	CODE	DESCRIPTION
1	5194542.01	DRAIN HOSE L=700MM SILICONE
6	5221844	NUT 1/8"G H3
8	7304505	FITTING 3 WAY 1/8"G OT
9	7630327	SOLENOID VALVE COIL 110V PARKER
9	7630328	SOLENOID VALVE COIL 220/230V PARKER
9	7630329	SOLENOID VALVE COIL 240V PARKER
10	7701111	SOLENOID VALVE 2 WAY 115V PARKER
10	7702310	SOLENOID VALVE 2 WAY 230V PARKER
10	7702409	SOLENOID VALVE 2 WAY 240V PARKER
12	5162245LL	BOILER LOAD HOSE
13	5301504TR	UNION ELBOW 1/8"G X M12
15	5223004	JET M6 X 6 HOLE D1
16	5302077TP	RUBBER-HOLDER FITTING
17	5471539	CALIBRATED SPRING D.1,6
18	7496052	OR GASKET 114 VITON
19	5224620TP	GASKET-HOLDER
20	5493042	GASKET D.11X3
21	5283053TP	SURPRESSION VALVE BODY
22	5224615TP	GASKET-HOLDER
23	5471505	SPRING D0.45 H22 AISI302
24	5302017TP	STRAIGHT FITTING M12
25	5965212AL	ASSEMBLY SURPRESSION VALVE 12BAR
26	7496018	OR GASKET 105 VITON

TABLE 8C (from 19.03.13)
Mod. S PM

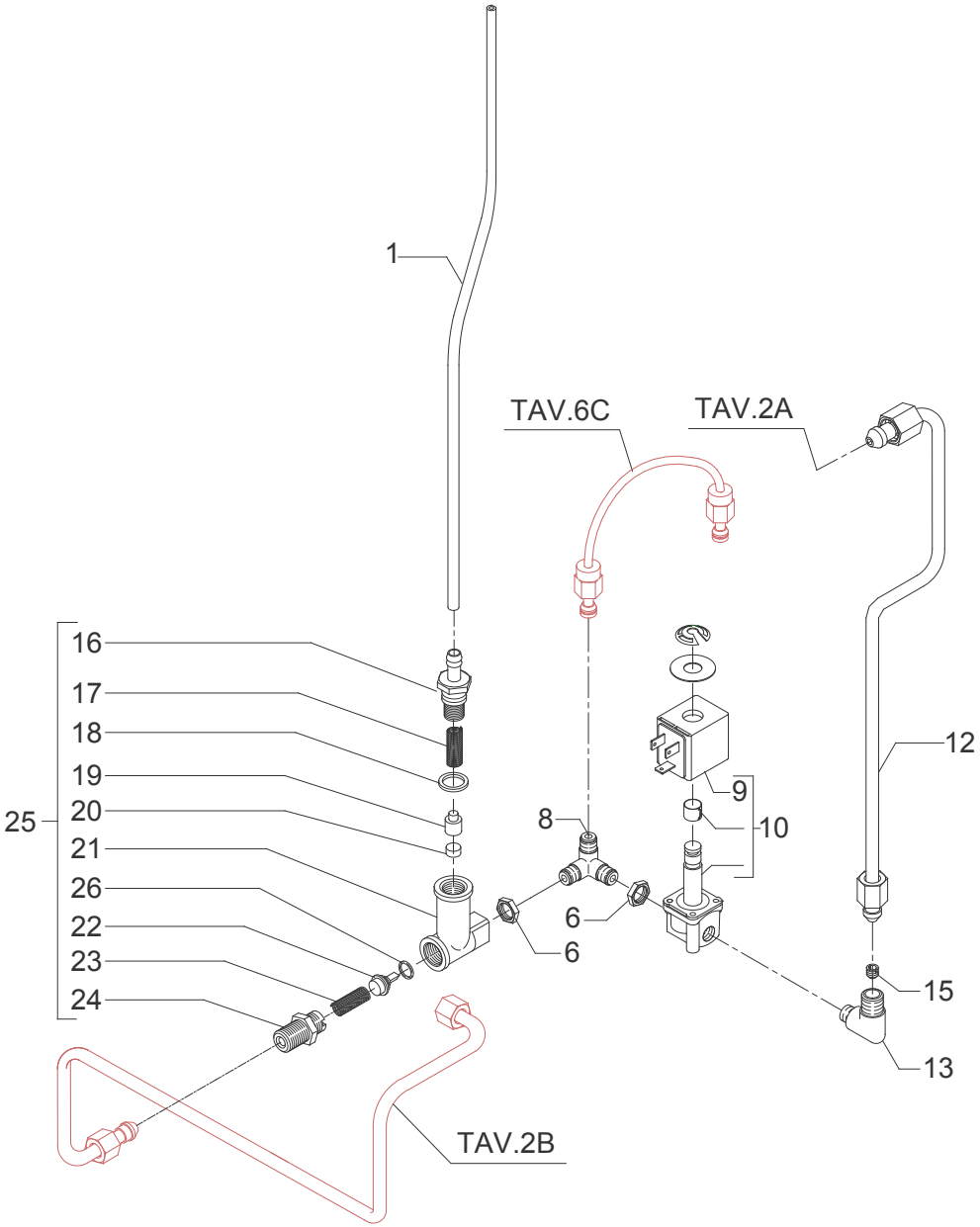

TABLE 9 (up to 31.03.10)

POS	CODE	DESCRIPTION
1	5373001	COFFEE-PRESS
2	5372101	MEASURER
3	5471003	BLIND FILTER
4	5471010	FILTER 1 CUP 5 GRAMS
4	5471004	FILTER 1 CUP 6 GRAMS
4	5471011	FILTER 1 CUP 8 GRAMS
5	5471007	FILTER 2 CUPS 12 GRAMS
5	5471009	FILTER 2 CUPS 14 GRAMS AISI 304
6	5975506.03R	FILTER-HOLDER WITHOUT SPOUT GREY
7	5471527	FILTER-HOLDER SPRING D1.2 AISI 302
8	5286016TW	FILTER-HOLDER
9	7371502	KNOB POLISHED
10	7305006TW	SPOUT 1 WAY
10	7288505TW	SPOUT 1 WAY SHORT
11	7305007TW	SPOUT 2 WAY
11	7288501TW	SPOUT 2 WAY SHORT
12	5965586R	ASSEMBLY COMPLETE FILTER-HOLDER 1 CUP
12	5965603R	ASSEMBLY COMPLETE FILTER-HOLDER 1 CUP (WITH SHORT SPOUT)
13	5965587R	ASSEMBLY COMPLETE FILTER-HOLDER 2 CUPS
13	5965604R	ASSEMBLY COMPLETE FILTER-HOLDER 2 CUPS (WITH SHORT SPOUT)
14	5373915	PLUG
14	5373915CM	KNOB CHROME CAP
15	7990603	CLEANING BRUSH

TABLE 9 (up to 31.03.10)

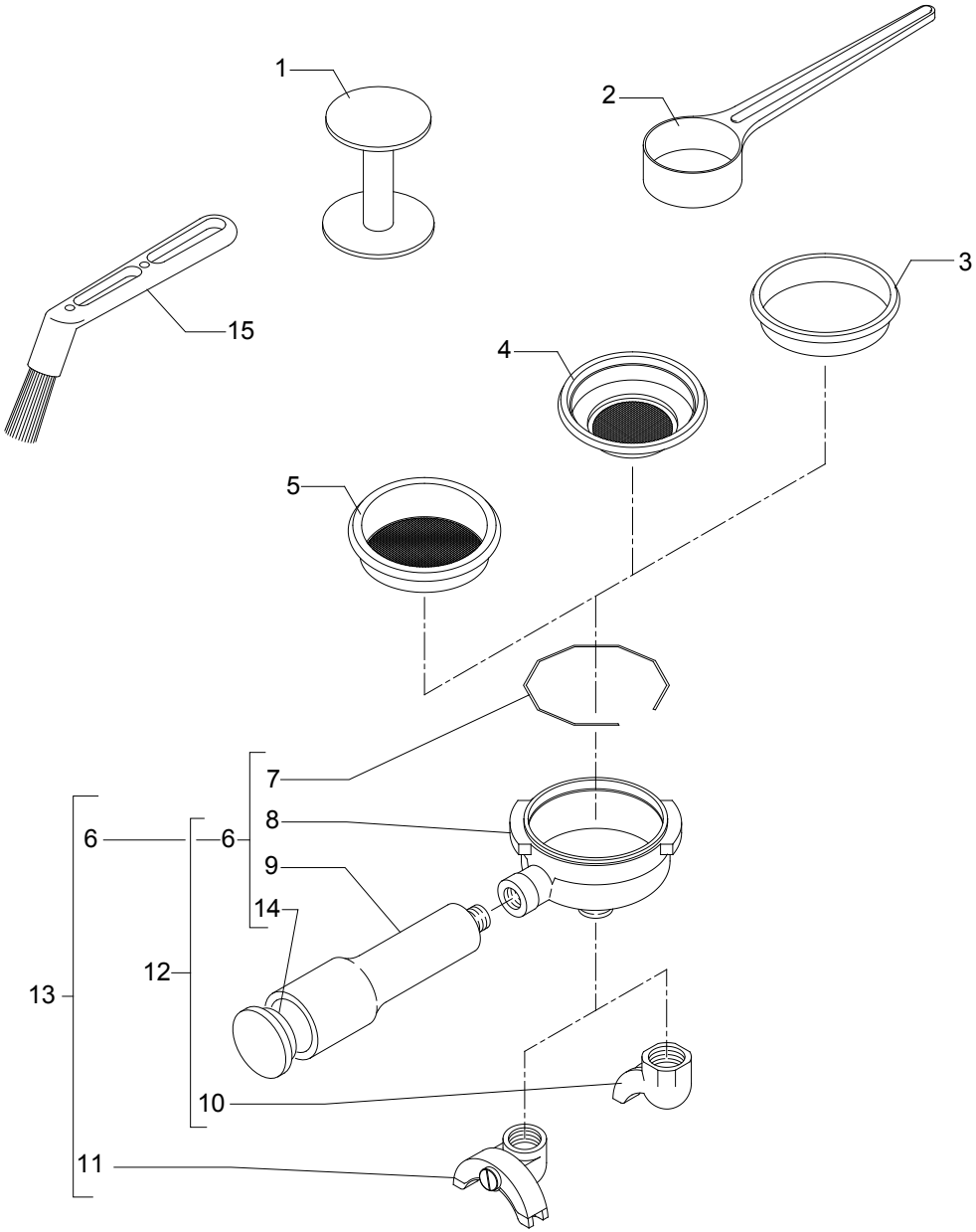

TABLE 9 (from 01.04.10)

POS	CODE	DESCRIPTION
1	5373001	COFFEE-PRESS
2	5372101	MEASURER
3	5471003	BLIND FILTER
4	5471023	FILTER 1 CUP 5 GRAMS WITH RUN CHANNEL
4	5471020	FILTER 1 CUP 6 GRAMS WITH RUN CHANNEL
4	5471031	FILTER 1 CUP 8 GRAMS WITH RUN CHANNEL
5	5471021	FILTER 2 CUPS 12 GRAMS AISI 304 WITH RUN CHANNEL
5	5471026	FILTER 2 CUPS 14 GRAMS WITH RUN CHANNEL
6	5975506.03R	FILTER-HOLDER WITHOUT SPOUT GREY
7	5471527	FILTER-HOLDER SPRING D1.2 AISI 302
8	5286016TW	FILTER-HOLDER
9	7371502	KNOB POLISHED
10	7305006TW	SPOUT 1 WAY
10	7288505TW	SPOUT 1 WAY SHORT
11	7305007TW	SPOUT 2 WAY
11	7288501TW	SPOUT 2 WAY SHORT
12	5965586R	ASSEMBLY COMPLETE FILTER-HOLDER 1 CUP
12	5965603R	ASSEMBLY COMPLETE FILTER-HOLDER 1 CUP (WITH SHORT SPOUT)
13	5965587R	ASSEMBLY COMPLETE FILTER-HOLDER 2 CUPS
13	5965604R	ASSEMBLY COMPLETE FILTER-HOLDER 2 CUPS (WITH SHORT SPOUT)
14	5373915	PLUG
14	5373915CM	KNOB CHROME CAP
15	7990603	CLEANING BRUSH

TABLE 9 (from 01.04.10)

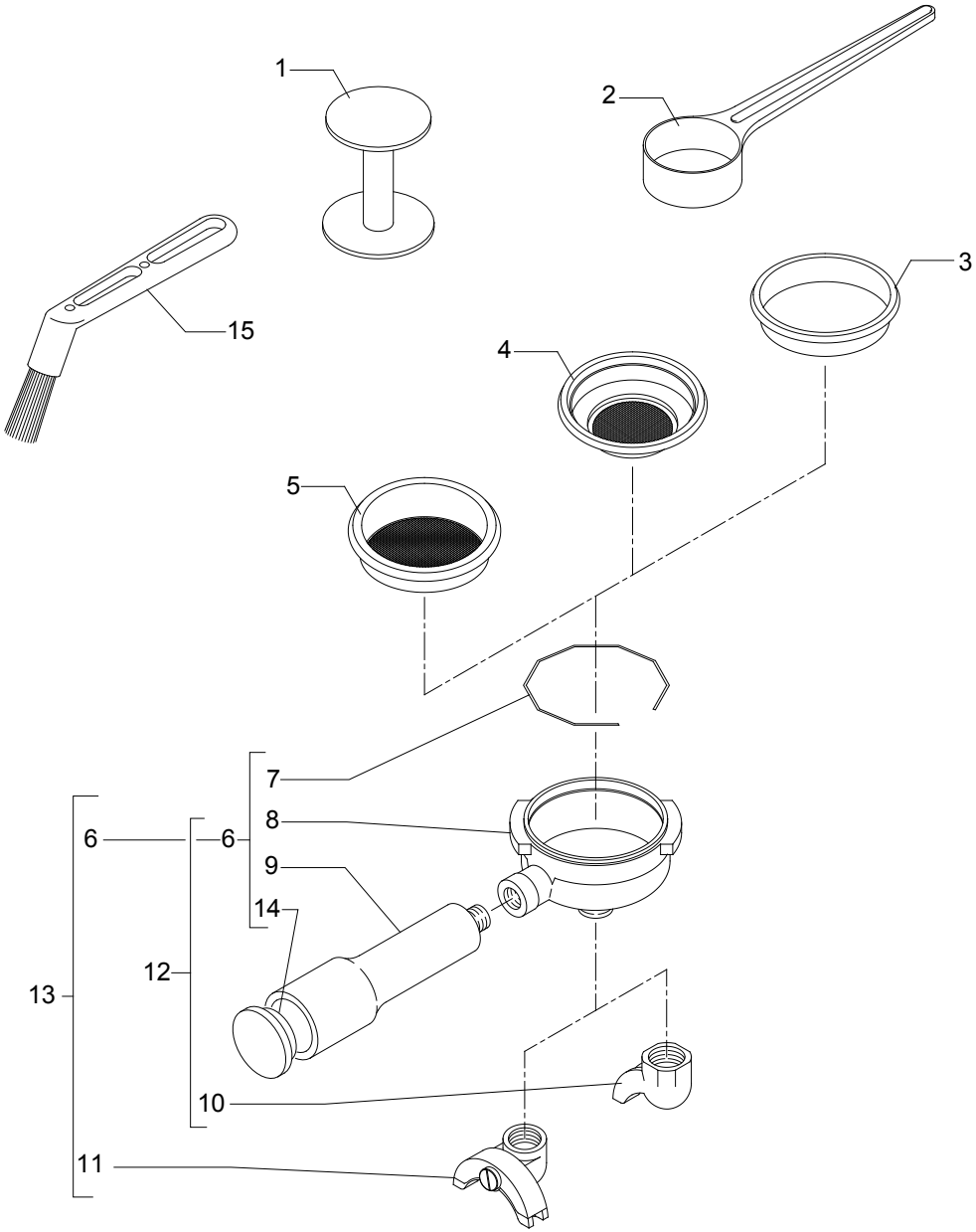

	POS	CODE	DESCRIPTION
TABLE 10	1	7432501	PRESSURE GAUGE D41 0-2.5 BAR PAINTED
	2	5074206LL	GROUP FRONTAL COMPLETE FOR PRESSURE GAUGE
	3	7400901	CAPILLARY 1/8" M12X1
	4	7433008	PRESSOSTAT XP/100 1/4"G CALIBRATION 1.2 BAR
	4	7433002	PRESSOSTAT XP/100 1/4"G CALIBRATION 1 BAR

TABLE 10

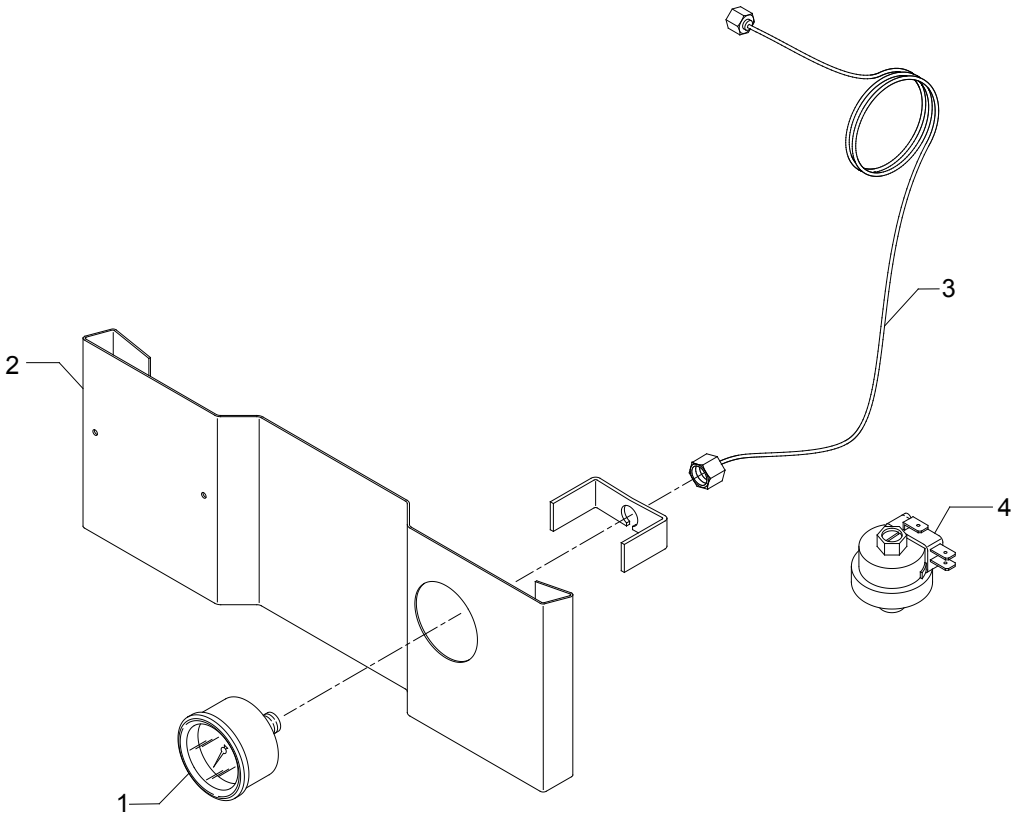

TABLE 11 Mod. S PM

POS	CODE	DESCRIPTION
1	7374002	FILTER 1/4"G H43,5 PLASTIC
2	5225401	REDUCTION GEAR 1/4"G X M10 WITH GASKET
3	5471521.01	COUPLING SPRING
4	7496073	OR GASKET 115 EP856
5	5471509	BALL 7/32" AISI 304
6	5374505	TANK
7	5224617	GASKET-HOLDER D14.5 X 25 OT
9	5221830	NUT M20 H5 OT
10	5344027	ASSEMBLY TANK SUPPORT
11	5225228	FITTING M20 H28.5 OT
12	5194553.01LL	PUMP-SOLENOID VALVE HOSE
13	7816009	SCREW TCEI M4X10
14	7499904LL	ADHESIVE SPONGE 55X55X20
15	7826206	SCREW TCI M3X30 UNI 6107 OT
16	7304502TR	STRAIGHT FITTING 1/8"G OT
17	5225246	FITTING 1/8"G
18	7611512	CLAMP
19	5194573	CRISTAL HOSE D9X6 L=180MM
20	5493040	TANK BRACKET GASKET
21	5098101LW	TANK BRACKET
22	7374006	SCREW TC M5X12
23	7374004	WASHER D4 NYLON
24	7819908	SCREW TTEI M4X8
25	7812601	NUT M4
26	7496076	OR GASKET 112 EPDM 70SH
27	5963070.01	ASSEMBLY TANK WITH FILTER

TABLE 11
Mod. S PM

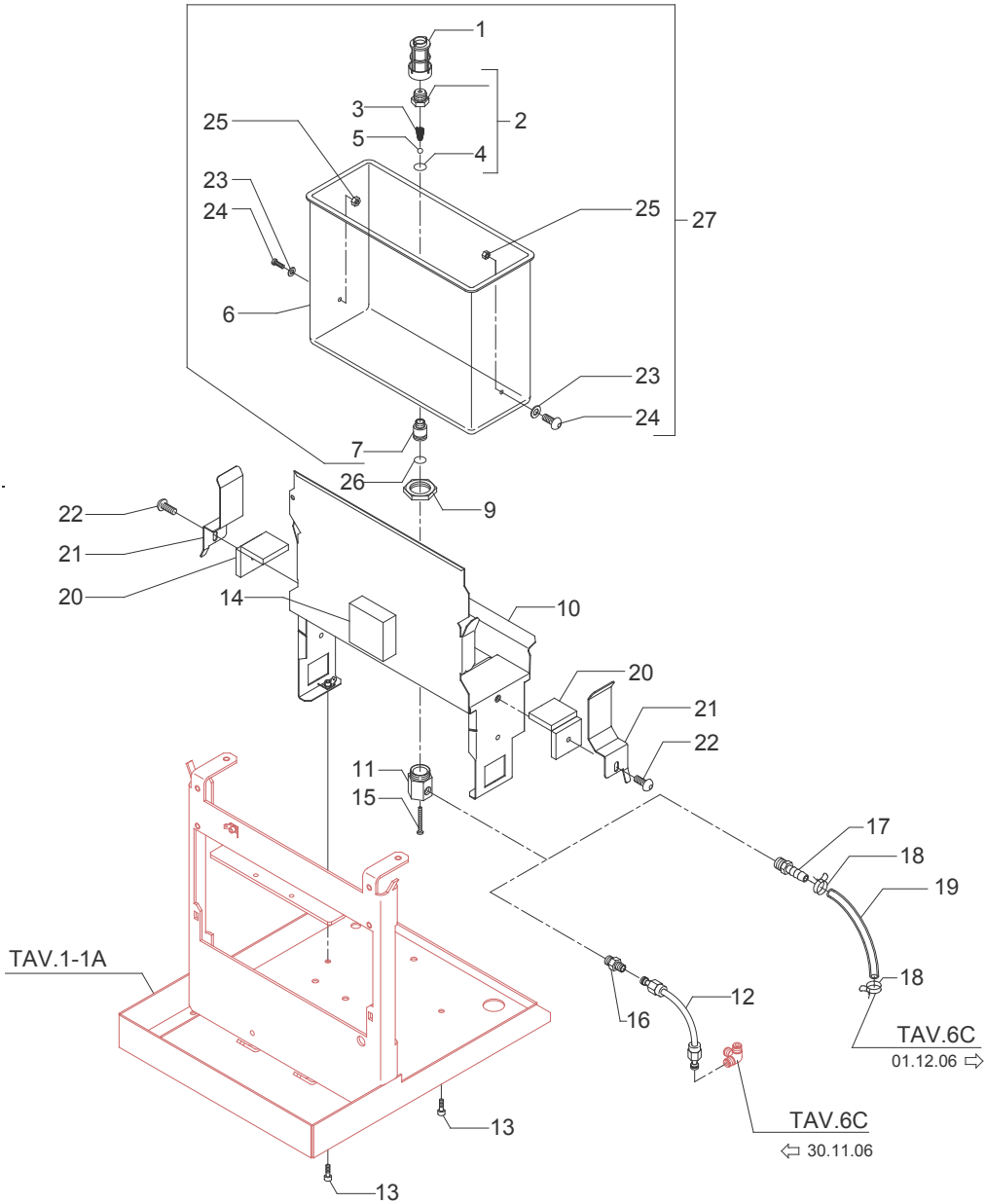

BEZZERA

Dal 1901

G.BEZZERA
MACCHINE PER CAFFE' ESPRESSO
Via Luigi Bezzera,1
20088 Rosate - Milano - Italy
Tel. ++39 02 90848102 r.a. - Telefax ++39 02 90870287
Web: www.g.bezzera.it
e-mail: commerciale@bezzera.it

Cod.9942014.08 ed.02/13 rev.00